SERVICE MANUAL

Wellwash 4 / 4Mk2

Thermo Fisher Scientific, Ratastie 2, P.O.Box 100, 01621 Vantaa, Finland
Telefax +358-9-32910 409, Tel. +358-9-329 100

WW004/853
(17.10.2007)

LABSYSTEMS

Wellwash 4

Operation manual

LABSYSTEMS

Information in this manual is subject to change without prior notice.

Cat. no. 1507330

The instrument has been designed and tested in accordance with DIN 57411 Pt. 1/VDE 0411 Pt. 1 and IEC Publication 348, Safety Requirements for Electronic Measuring Apparatus, and has been supplied in safe condition. The instrument fullfills the requirements related to the EU Directives 73/23/EEC, related to safety (Low Voltage Directive) and 89/336/EEC (as amended by 92/31/EEC) related to Electromagnetic Compatibility. (See section 1.3 for details.)

The present instruction manual contains some information and markings which have to be followed by the user to ensure safe operation and to retain the instrument in a safe condition.

Every effort has been made to avoid errors in test and diagrams. However, Labsystems assumes no responsibility for any errors which may appear in this publication.

It is the policy of Labsystems to improve products as new techniques and components become available. Labsystems therefore reserves the right to change specifications at any time.
We appreciate any comments on this publication

Labsystems Wellwash 4

Operation Manual

10.7.1997

CONTENTS

		Page
1.	INTRODUCTION	3
1.1	Description of the Instrument	3
1.2	Safety and Power Requirements	4
1.3	Specification	5
2.	UNPACKING AND INSTALLATION	7
2.1	Unpacking and Inspection for Transit Damage	7
2.2	Site Requirements	7
2.3	Installation Procedure	7
2.4	Operational Check	9
3.	OPERATING PROCEDURE	10
3.1	Controls and Indicators	10
3.2	Operating Procedures	11
3.3	Shut Down Procedure	12
4.	OPERATING PRECAUTIONS AND LIMITATIONS	13
4.1	Before Operation	13
4.2	Cleanliness	13
4.3	In Operation	13
4.4	Disinfection Procedure	14
5.	HAZARDS	16
5.1	Liquid Reservoir - IMPORTANT	16
5.2	Electrical	16
5.3	Mechanical and Environmental	17
5.4	Defects and Abnormal Stresses	17
6.	SERVICE	18
6.1	Warranty Statement	18
6.2	Service Contracts	18
6.3	Maintenance and Service	18
6.4	Fault Finding	19
6.5	Fuse Replacement	20
6.6	Service Requests	20

1. INTRODUCTION

This manual gives the installation and operating instructions for the Wellwash 4 Microplate Washer together with the maintenance procedures that may be performed by the user.

The manual should be read in its entirety prior to any attempts to operate the Washer. Special attention should be paid to sections 2, 3, 4 and 5.

1.1 Description of the Instrument

The Wellwash 4 is designed to wash coated wells in a 8 x 12 microplate. It comprises of a Pump Unit and Washer Unit (Fig.1) which are connected by power, air and liquid lines.

The **Pump Unit** consists of a double headed vacuum Pump with high density polythene Reagent and Waste Bottles and Liquid Trap. At the rear of the Pump Unit is the main power on/off switch.

Located on the left hand side of the **Washer Unit** unit is the Control Panel under which the microprocessor and associated control electronics are housed. Above the Plate Carrier slideway is the Wash Head which can be either 8 or 12-way. A Plate Carrier locates the microplate accurately beneath the Wash Head and incorporates a Priming Reservoir at its leading edge. The carrier is indexed foward by means of a magnetic coupling to the drive system housed inside the Washer.

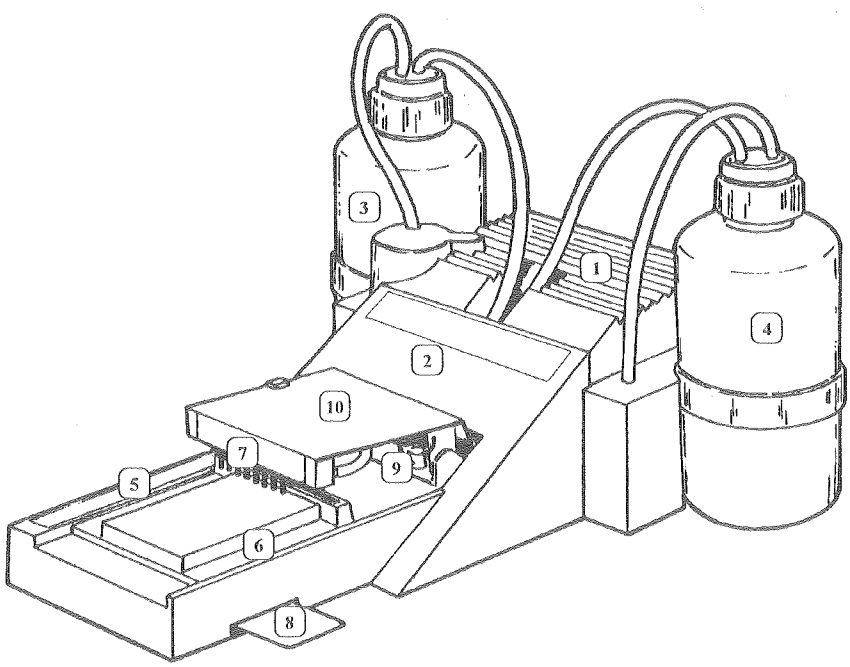

1.	Pump Unit	6.	Plate carrier
2.	Washer Unit	7.	Wash head
3.	Waste Bottle	8.	Program card
4.	Wash Bottle	9.	Pinch valve
5.	Control panel	10.	Head assembly

Fig. 1. Wellwash 4 Microplate Washer

1.2 Safety and Power Requirements

1.2.1 International Safety Warning IEC 348 Class 1

This manual contains information and warnings which must be observed by the user to ensure safe operation and retain the instrument in a safe condition. The instrument has been designed for indoor use within the specified limits of temperature, i.e. +5°C to +40°C, RH 90 % max. and an altitude below 2000 m. It should not be switched on if there are obvious signs of mechanical damage and it should not be used under wet conditions.

1.2.2 Grounding (Earth)

The instrument must be operated with a protective ground connected via the appropriate (yellow/green) wire of the mains cord. This is connected to the instrument before the line and neutral supply connections when the supply plug is inserted into the socket on the back of the instrument. If the final connection between this and the supply is made elsewhere the user must ensure the ground connection is made before line and neutral.

1.2.3 Live Parts

The instrument is safe to operate with covers fitted and these must not be removed under normal usage. The covers protect the user from live parts and they should be removed only after switching off the instrument and disconnecting the mains supply cord, and by suitably qualified personnel for maintenance and repair purposes.

WARNING

VOLTAGES DANGEROUS TO HUMAN LIFE ARE PRESENT IN THIS INSTRUMENT. BEFORE REMOVING ANY COVERS, DISCONNECT THE INSTRUMENT FROM THE POWER SUPPLY.

1.2.4 Operating Temperature

The instrument is designed for safe operation in an environment having an ambient temperature of between +5°C and +40°C, RH 90 % max. and an altitude below 2000 m. It will operate with full accuracy within a temperature range of +15°C to +25°C.

NOTE: The use of the instrument in strong direct sunlight or next to radiators and other heat sources may markedly increase the temperature at the instrument and this should be taken into account when deciding where the instrument should be located and operated.

1.3 Specification

Input Voltages	220-240 VAC / 50 Hz 110-120 VAC / 60 Hz
Power Consumption	240 VA
Operating Cycle	Continuous
Fuse Requirements	
220/240VAC 50Hz	1 off 0.5A anti-surge fuse in rear of Washer Unit 1 off 1.0A anti-surge fuse in rear of Pump Unit
110/120VAC 60Hz	1 off 0.5A anti-surge fuse in rear of Washer Unit 1 off 2.0A anti-surge fuse in rear of Pump Unit
Containers	
Reagent Bottle Capacity	2 ltr.
Waste Bottle Capacity	2 ltr.
Fluid Consumption	
Wash Fluid Consumption	approx. 150ml/complete microplate
Priming Consumption	approx. 15ml
Pressure	Max. pressure on Vessel 7psi. (self limiting)
Dimensions	
Washer Unit	41cm x 22cm x 12cm
Pump Unit	30cm x 18cm x 16cm
Weight	
Washer Unit (WW004/W)	4.5 Kg
Pump Unit (WW004/P)	5.5 Kg
Temperature	
Operating Range	+5°C to +40°C
Full Specification Range	+15°C to +25°C
Storage Temperature Range	-10°C to +70°C
Relative Humidity	90% max
Safety	
Wellwash 4 fullfills the following requirements.	IEC 348 Cat.1 & DIN 57411 Pt.1/VDE 0411 Pt.1 Safety Class 1 IEC 1010-1 including Amendments 1 and 2.

The safety specifications are met also under the following environmental conditions in addition or in excess to those stated in the operating conditions:

Altitude:	up to 2000 m
Mains supply fluctuations:	+/- 10%
Installation category (overvoltage category):	II according to IEC 664-1 (note 1)
Pollution degree:	2 according to IEC 664-1 (note 2)

Notes

1) Installation category (overvoltage category) defines the level of transient overvoltage which the instrument is designed to withstand safely. It depends on the nature of the electricity supply and its overvoltage protection means. For example in CAT II which is the category used for instruments in installations supplied from a supply comparable to public mains such as hospital and research laboratories and most industrial laboratories the expected transient overvoltage is 2500 V for a 230 V supply and 1500 V for a 120 V supply.

2) Pollution degree describes the amount of conductive pollution present in the operating environment. Pollution degree 2 assumes that normally only non-conductive pollution such as dust occurs with the exception of occasional conductivity caused by condensation.

Both of these affect the dimensioning of the electrical insulation within the instrument.

Conformance to the EU Directives

Wellwash 4 bearing the CE mark conforms to the following EU Directives	89/336/EEC (as amended by 92/31/EEC) relating to Electromagnetic Compatibility 73/23/EEC (Low Voltage Directive)	
Performance specifications used to verify conformance to the Directives above	EN 55014	
	IEC 801-3	3V/m
	IEC 801-2	4 kV CD, 8 kV AD
	IEC 801-4	1 kV
	IEC 1010-1/EN 61010-1 Including Amendments 1 and 2	

Catalogue Description — Wellwash 4 Semi-Automatic microplate Washer, comprising Pump and Wash Units.

The instrument is supplied with both 8-way and 12-way Wash Heads, 4 Program Cards and an accessory pack which comprises:

Operators Manual	Spare Fuses	Spanners
Mains Supply Cable	Spare Tubing	Allen Key
Declogging Tool	Spare O Rings	

2. UNPACKING AND INSTALLATION

2.1 Unpacking and Inspection for Transit Damage

The Wellwash 4 comprises two units which are packed in the same carton. Place the carton on the floor and open the top. This will reveal an inner carton, opening this will reveal the two further packs approximately half the size of the carton. One pack contains the Pump Unit (Figure 1:1), the other is a rectangular tube containing the accessories, underneath which is a further pack containing the Washer Unit. Remove accessory/spares pack from the top of the Washer Unit. Lift out the packs and open them to reveal the Accessories, Pump and Washer units (Figure 1:2).
Lift out the Washer and Pump Units, removing the shaped packing pieces from around the Washer, and place them on a flat level surface. Remove the units from their plastic bags and the packing piece from underneath the Wash Head (Figure 1:7). Remove the plastic bag from around the Head Assembly (Figure 1:10).

NOTE: Retain the original packing materials for future use in the event that the unit is shipped to another location or returned for service. This package is customed designed to assure safe shipment, so please do not substitute alternative packing materials.

Check for visible signs of damage. If damage is found, retain the packing material, request an inspection by the Carrier, and notify your supplier in writing within three days.

Neither the Manufacturer nor its agents can be held responsible for damage in transit, but will make every effort to help obtain restitution from the Carrier. Upon receipt of the Carrier's inspection report, arrangements will be made for repair or replacement.

2.2 Site Requirements

The Washer and Pump Units require no special site preparation. A normal laboratory bench close to a mains supply socket is quite suitable. Check that the voltage label on the rear of the Pump Unit conforms to the supply voltage in the laboratory.
Wellwash 4 does not produce operating noise at a level which could cause a hazard. No sound level measurements are needed after installation.

2.3 Installation Procedure

The following procedure may be carried out by any suitably skilled person using standard tools.

2.3.1 Rest the Pump Unit on its side to and remove the transit screws (Allen cap head type painted red) using the key supplied. Relocate them in the retaining holes provided.

NOTE: When moving this instrument to a different location or returning it for repair, it is essential that the transit screws are refitted. **Failure to do so could invalidate the warranty**.

2.3.2 Remove the two black plastic caps from the hose connectors at the rear of the Washer Unit.

2.3.3 Connect the pressure/aspirate and vacuum tubing from the Pump Unit to the Washer Unit. All tubing and connections are colour coded to ensure correct connection. Colour coding as follows:

Black	Pressure feed from the Pump to the Wash Reagent Bottle
Yellow	Pressuring Wash Reagent from the Wash Reagent Bottle to the Washer Unit
Red	Vacuum feed from the Pump to the Waste Bottle
Blue	Waste feed from the Washer Unit to the Waste Bottle

Connect the Vac Fail tubing from the front of the Pump Unit to the connector on the rear of the Washer Unit (See Fig. 2). Slide the two units together until the locating pegs are firmly engaged. Ensure that the vacuum tubing is not kinked or pinched (See Fig. 2)

2.3.4 Remove the Reagent Bottle (Figure 1:3, 1:4) by rotating it whilst holding the cap stationary. Fill the Reagent Bottle up to the shoulder with wash reagent and reconnect ensuring that the pointed end of the wash reagent tubing is in contact with the bottom of the bottle and that the cap is tightly screwed down. Tighten the cap on the Waste Bottle. Place the Plate Carrier on the slideway orientated such that the Priming Reservoir is beneath the Wash Head.

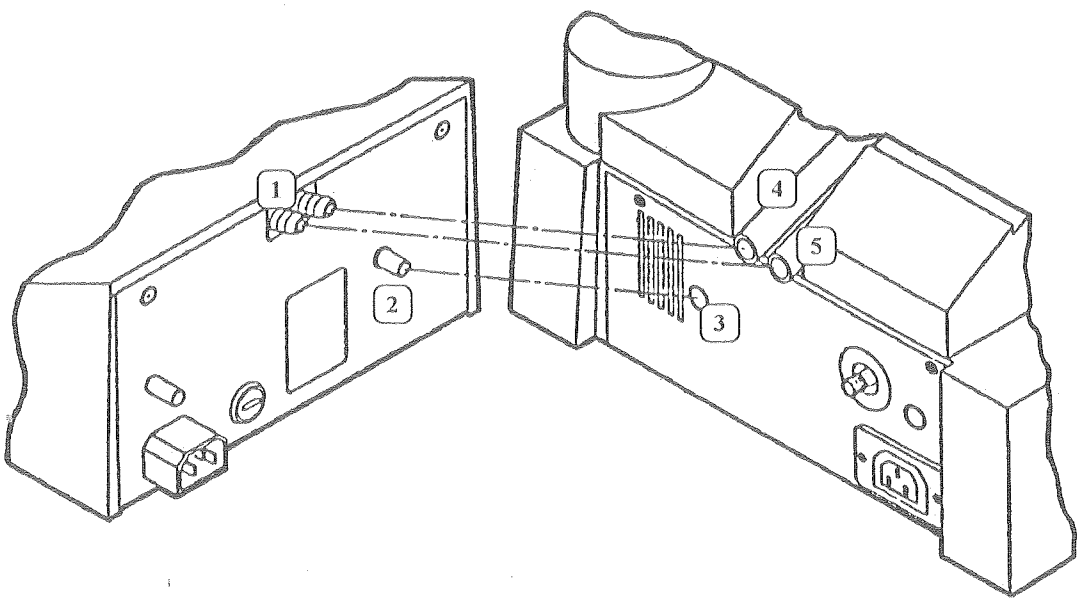

1. Manifold pipes
2. Locating pin
3. Friction bush
4. Silicone tube (waste)
5. Silicone tube (wash)

Fig. 2. Connection of Pump and Washer Units

2.3.5 Ensure that the Pump mains switch is in the OFF position. After checking that the electrical supply conforms with that specified on the voltage label on the rear of the Unit, plug the mains supply cable into the socket provided at the rear of the washer. **If the correct type of mains cord is not provided, use only cords certified by the local authorities.** Connect the mains plug to the mains power socket.

2.3.6 Changing Wash Heads

Lift the Head Assembly (Figure 1:10), grasp the Wash Head (Figure 1:7) at both ends and slide it down in the direction of the tips until it clears the end caps. Check that the two O-rings in each end cap are in position and undamaged. To install the alternative Wash Head, slide it upwards on the slots making sure that it is fully engaged.

NOTE: The Wash Heads will only fit into the end slots when the raised flange on the Wash Head is to the front.

2.4 Operational Check

The following procedure should be completed to confirm the correct functioning of the Washer prior to normal use.

2.4.1 Check that the Wash Head is correctly located by means of its guide slots in the Head Assembly and that both Bottle Caps are firmly tightened.

2.4.2 Switch ON the mains power supply and depress the POWER ON switch positioned on the rear of the Pump Unit. The POWER ON indicator on the Control Panel will be illuminate and a countdown sequence will begin on the Row indicators. Row 12 indicator will illuminate first followed by Row 11, Row 10, Row 9 and so on, at one second intervals until the prime LED is reached. The prime LED indicator continues flashing to prompt the user to prime the system.

2.4.3 Select an appropriate Program Card for the procedure required. Plug it into the slot on the right hand side of the Washer Unit.

2.4.4 Lift the Head and slide the Plate Carrier onto the stainless steel slideway so that the Reservoir is under the Wash Head.

2.4.5 Press the PRIME button. The Wash Head will operate three times up and down, dispensing into and aspirating from the Priming Reservoir finally stopping in the DOWN position.

2.4.6 Place a microplate onto the Plate Carrier. When using a 12-way Wash Head, well A1 of the microplate should be positioned in the top left hand corner.

2.4.7 Select on the Control Panel the row number of the last row to be washed (eg. when the button 4 is pressed rows 1 to 4 will be washed).

NOTE: When the 12-way Program Card is installed buttons 9-12 are inoperative.

2.4.8 Press the START button which will set the washing cycle into operation. The carriage will be drawn into the Washer filling and aspirating each row to the sequence selected on the Program Card. At the end of a sequence rows will be left substansially dry and the Carriage will stop with the Priming Reservoir under the Wash Head.

3. OPERATING PROCEDURES

3.1 Controls and Indicators

The following paragraphs describe the Controls and Indicators on the Wellwash 4.

3.1.1 POWER ON/OFF Switch
This two position switch at the rear of the Pump Unit controls the electrical power to both the Pump and Washer Units.

3.1.2 POWER Indicator
This green LED is located at the bottom left of the Control Panel and, when illuminated, indicates that the POWER switch is ON.

3.1.3 PRIME Push Button
A momentary action switch which starts the PRIME function.

3.1.4 PRIME Indicator
This yellow LED located to the right of the PRIME button flashes to indicate that the PRIME function is required and, when permanently ON, indicates that the Washer is primed and ready for use.

3.1.5 ROW SELECT (1-12) Push Buttons
These are momentary action switches which select the last row to be washed in any chosen program sequence.

3.1.6 ROW SELECT Indicators
These yellow LEDs located to the right of the ROW SELECT push buttons, when illuminated, indicate the rows selected for washing.

3.1.7 START Push Button
This momentary action switch initiates the wash cycle.

3.1.8 RESET Push Button
When depressed, will reset the Washer to its preprogrammed state.

3.1.9 VACUUM FAIL Indicator
A yellow LED which, when flashing, indicates a vacuum failure.

NOTE: Operation of all buttons is confirmed by an audible tone from the Washer.

3.2 Operating Procedures

3.2.1 Switching ON

Ensure that the switch located at the rear of the Pump Unit is in the OFF position. Switch ON the mains supply and depress the POWER switch to ON. The POWER ON indicator on the Control Panel should be illuminated and adjacent PRIME indicator should flash.

3.2.2 Priming Procedure

Position the Plate Carrier on its slideway with the Priming Reservoir to the rear under the Wash Head. Press the PRIME button. The Wash Head will operate up and down aspirating and dispensing into the Reservoir finally stopping in the down position. The priming function is complete when PRIME indicator is permanently illuminated.

NOTE: The priming procedure must be repeated whenever the POWER switch has been operated or there has been an interruption of the power supply.

3.2.3 Loading a Microplate

Place the microplate on the Plate Carrier ensuring that it is correctly orientated (See Section 2.4.6).

When using removable well plates, ensure that no wells are missing from rows to be washed and that all wells are level on the Plate. Wellwash 4 has been designed to work with the majority of plates in common use. If you experience difficulty with the location of a particular microplate, please contact the Manufacturer or his approved distributor.

3.2.4 Examples of Wash Routines

Wellwash 4 is programmable by use of simple plug-in Program Cards for each assay or routine required. Functions preset or which can be included in any routine are as follows:

1. Aspirate and fill rows sequentially once only with a final aspirate.
2. Aspirate and fill rows 3 times followed by a final aspirate.
3. Aspirate and fill **rows 4 times** with a final aspirate.
4. Aspirate-fill-aspirate rows once sequentially followed by aspirate and fill rows 3 times with a final aspirate.
5. Aspirate and fill rows 4 times with 3 seconds pause after each row followed by a final aspirate.

In addition to standard program cards for routine wash procedures, cards can be provided for special routines incorporating any of the above functions (See Section 7).

3.2.5 Program Selection

Choose appropriate Card for the wash routine. Plug the Card into the slot located at the base of the right hand of the Wash Unit.

NOTE: Before inserting any Program Card ensure that it is clean and dry, wiping the surfaces with a soft dry cloth will suffice. If any liquid is present on the Card a malfunction of the Program may occur.

3.2.6 Row Selection

Select on the Control Panel the row number of the last row to be washed (eg. when button 4 is pressed then rows 1 to 4 will be washed.)

NOTE: When the 12-way Program Card is installed, buttons 9 to 12 are inoperative.

3.2.7 Washing a Microplate

Select the number of rows to be washed remembering that it is only necessary to press the button assigned to the last row to be washed. Pressing any other button will override the previous selection and automatically reset the program.

Press the START button which will initiate the wash sequence. The Plate Carrier will advance into the Washer aspirating and filling selected rows in the sequence determined by the Program Card fitted. On completion of the protocol the Plate Carrier will come to rest with the wash head lowered into the Priming Reservoir.

NOTE: Pressing the START button without entering a program will automatically cause the Washer to aspirate the whole microplate.

3.2.8 Resetting

Pressing the RESET button on the Control Panel will at any stage stop the immediate washing sequence and reset the system to its preprogrammed state.

3.2.9 Reagent/Waste Bottles

Ensure that the Waste Bottle is emptied regularly and at least every time a Reagent Bottle is loaded into the Washer.

The Liquid Trap Bottle which prevents liquid entering the Pump **should be kept dry at all times**.

3.3 Shut Down Procedure

Wash Reagents may contain buffer salts which can crystallise when the Washer is not in use. This may cause clogging of the wash/aspirate tips. To avoid this, the following procedures should be followed.

3.3.1 Daily Shut Down Procedure.

When the last washing cycle of the day is complete, switch the power OFF through the switch at the rear of the Pump Unit. Fill the Priming Reservoir of the Plate Carrier with distilled water and lower the Wash Head Tips into the Priming Reservoir.

3.3.2 Long Period Shut Down.

If the Washer is not likely to be used for a long period, the system should be flushed through with distilled water prior to carrying out the DAILY shut-down procedure. Empty and clean the Waste Bottle and check that the Liquid Trap is dry. When the Washer is to be used after prolonged shut-down the system should be primed (see Section 3.2.2) at least **4 times** prior to carrying out any wash function.

4. OPERATING PRECAUTIONS AND LIMITATIONS

4.1 Before Operation

Read this manual in its entirety.
The instrument should be unpacked and installed in accordance with Section 2. Particular attention should be paid to the correct fitting of the tubing to obviate leaks (See Fig. 2). Always ensure that the electrical supply in the laboratory conforms to that specified on the voltage label on the rear of the Pump Unit.

4.2 Cleanliness

Please clean the instrument regularly as stated below.

4.2.1 It is recommended that the case of the instrument is cleaned periodically to maintain its good appearance. It is particularly essential that the Carrier slideway be clean and dry to prevent jamming. A soft cloth dampened in warm, mild detergent solution will be found to suffice.

4.2.2 If any surfaces have been contaminated with biohazardous material a mild sterilising solution should be used.

4.3 In Operation.

4.3.1 Ensure that the Waste Bottle is emptied regularly and at least every time that a Reagent Bottle is loaded. The Liquid Trap Bottle which prevents liquid from entering the Pump should be kept dry at all times.

4.3.2 Before pressing START button ensure:

1. that the Wash Head is fitted
2. that the microplate is correctly orientated
3. that before any Program Card is fitted it should be wiped with a clean dry cloth to prevent any possibility of malfunctions
4. that the appropriate Program Card is fitted for procedure required
5. that if only **part** of a plate is to be washed, the correct button is selected to cover the **last** row to be washed
6. that if removable well microplates are being used, there are no missing wells in the rows to be washed **and that all wells are level**

4.3.3 Wash Head Height: To accomodate the differences in size and volume capacity of manufacturers microplates, the height of the Wash Head is adjustable. This means that a positive meniscus can always be obtained without the unnecessary waste of Wash Reagent.
The Wash Head is factory set at a nominal height to suit the most commonly used microplates, should adjustment be required follow these instructions:

1. Adjustment is performed using the M3 spanners supplied with the instrument.
2. Located on the left hand side of the Washer Unit immediately above the Control Panel is a stainless steel Head Lift Rod. At the top of the Rod is a domed nut with a lock nut underneath.

3. By loosening the nut lock, height adjustment can be performed by rotating the domed nut, clockwise to lower the Wash Head and anti-clockwise to raise the Wash Head.
4. Set the Tips of the Wash Head to approx. 1.5 mm to 2.0 mm above the height of a microplate on the Plate Carrier, when the Wash Head is in the **raised** position.

4.4 Disinfection

WARNING

IF LOCAL OR LABORATORY REGULATIONS PRESCRIBE REGULAR DISINFECTION, IT IS ADVISABLE NOT TO USE FORMALDEHYDE, SINCE EVEN SMALL TRACES OF FORMALDEHYDE AFFECT THE ENZYME BEING USED IN MICROELISA TESTS IN A NEGATIVE WAY RESULTING IN BAD TEST RESULTS.

The prescribed disinfection procedure is required prior to shipping the instrument to Labsystems, e.g. for repair. The complete disinfection procedure of the instrument is advised prior to relocating the instrument from one laboratory to another.
Disinfection is not required for the proper functioning of the instrument.

Disinfection agents:	Formaldehyde solution	10%
	Alcohol	70%
	Gluteraldehyde solution	4%

WARNING

ALWAYS USE DISPOSABLE GLOVES AND PROTECTIVE CLOTHING IN A WELL VENTILATED AREA.

4.4.1 Disinfection procedure before transport:

Before the unit is transported the following procedure, or something similiar, should be completed:

1. Prepare the disinfection agents (200 ml 10% Formaldehyde solution and 200 ml 4% Gluteraldehyde solution).
2. Prime the unit from the Reagent Bottle with distilled water.
3. Lift the Wash Head and fill the Prime Tray with gluteraldehyde solution.
4. Aspirate the Prime Tray using the Wash Head then reprime the Prime Tray with distilled water.
5. Remove the Plate Carrier and the Wash Head, place in gluteraldehyde solution for 24 hours.
6. Empty the fluid containers.
7. Switch OFF the power and disconnect the mains cable.
8. Disinfect the outside of the unit using a wad of cotton wool soaked in 70% alcohol.
9. Place the entire instrument in a large plastic bag. Ensure that the reagent containers are disconnected and open.
10. Place a wad of cotton wool soaked in the 10% Formaldehyde solution into the bag. Ensure the wad does not make contact with the instrument.
11. Close the bag firmly and leave the instrument in the bag for at least 24 hrs.
12. Remove the instrument from the bag.
13. Clean the instrument using a mild detergent.
14. Remove any stains using 70% alcohol.
15. Take the Plate Carriage and the Wash Head out of the gluteraldehyde solution and rinse with distilled water. Reposition them on the unit.
16. Flush the fluid path of the instrument with distilled water using the priming procedure.
17. After performing this disinfection procedure, label the instrument with a signed and dated decontamination certificate.

5. HAZARDS

This instrument is designed to provide full user protection. When correctly installed, operated and maintained, it will present no hazard to the user.

The following recommendations are given for added user safety.

5.1 Liquid Reservoir - IMPORTANT

Due to the nature of the materials used for the manufacture of our reservoir bottles our suppliers have recommended that they are replaced after two years use. This replacement policy must be more frequent if the bottles are stored or used in direct sunlight for long periods.

Labsystems are aware a potential leak in the pressure bottles when they have been subjected to long periods of UV radiation. Although this occurance is very rare, our customers are urged to follow this advice.

Bottles are available from Labsystems for both the Wellwash 2 and Wellwash 4 using the catalogue number 934/1.

5.2 Electrical

Ensure that the mains supply cord supplied with the Unit is always used. **If a correct type of mains cord is not provided, use only cords certified by the local authorities.**

The mains plug should only be inserted in a socket outlet provided with a protective earth contact. The protective action must not be negated by use of an extension cord without a protective earth wire.

Do not replace fuses without first disconnecting the mains supply cord.

Ensure that only fuses with the required rated current and of the specified type are used for replacement. The use of makeshift fuses and the short-circuiting of fuseholders is prohibited.

When the instrument is connected to the mains supply the opening of covers or removal of components is likely to expose live parts. The instrument should be disconnected from all voltage sources by disconnecting the mains supply cord before it is opened for any adjustment, replacement, maintenance or repair.

Any adjustment, maintenance or repair of the opened instrument under voltage should be avoided if possible but, if unavoidable, should be carried out only by a skilled technician aware of the hazard.

WARNING

VOLTAGES DANGEROUS TO HUMAN LIFE ARE PRESENT IN THIS INSTRUMENT. BEFORE REMOVING ANY COVERS, DISCONNECT THE INSTRUMENT FROM THE POWER SUPPLY.

The same precautions applicable when using any electrical equipment should of course be observed with this instrument. Do not touch switches or electrical outlets with wet hands. Switch instrument off before disconnecting from the mains supply.

5.3 Mechanical and Environmental

5.3.1 Mechanical

The Wash Head is a free moving mechanical device controlled by the instrument and not directly by the operator. It is designed for "hands-off" operation and should be used as such. Never reach into the work space while the instrument is performing a wash cycle. If it is necessary to stop operation of the equipment, press Reset button on the Control Panel.

5.3.2 Environmental

Infectious clinical samples and corrosive fluids are commonly used with this equipment. The "hands-off" nature of the system allows the user to wash reaction wells without direct contact with these fluids. However, wells that have been in contact with potentially hazardous fluid must be handled before and after the wash process, and this should be done with utmost care. Hand and eye protection should always be worn as well as corrosive resistant laboratory coats.

When spills contact the Carrier slideway they should be decontaminated with a hard surface disinfectant.

Observe normal laboratory procedures for handling potentially hazardous samples.

5.4 Defects and Abnormal Stresses

Whenever it is likely that the protection has been impaired, the instrument shall be made inoperative and be secured against any unintended operation. (See Section 6).

The protection is likely to be impaired if, for example, the instrument:

1. shows visible damage
2. fails to perform the intended functions
3. has been subjected to prolonged storage under unfavourable conditions
4. has been subjected to severe transport stresses

6. SERVICE

WARNING

VOLTAGES DANGEROUS TO HUMAN LIFE ARE PRESENT IN THIS INSTRUMENT. BEFORE REMOVING ANY COVERS, DISCONNECT THE INSTRUMENT FROM THE POWER SUPPLY.

6.1 Warranty Statement

This instrument is warranted against defects in workmanship or material for a period of 12 months from the date of purchase. Any fault or part found to be defective will be repaired, or at the manufacturers option, replaced without charge for labour or material on condition that the instrument:

1. Has been used only on the supply voltage as stated on the rating plate attached to the instrument.
2. Has not been tampered with or been subject to misuse or accident and that any recommended user maintenance has been completed on schedule.
3. Has not been repaired or modified by any person other than an authorised Manufacturer's employee or agent.

6.2 Service Contracts

It is strongly recommended that this instrument is regularly maintained and serviced every six months on a contract basis by the Manufacturer's trained service engineers. This will ensure that the product is properly maintained and gives trouble-free service. For details, please contact the Service Department. (See Section 6.6)

6.3 Maintenance and Service

Routine maintenance and service procedures that may be performed by the user are described below. For any other service problems, refer to the authorised service (See Section 6.6)

6.3.1 Routine Maintenance

Clean the instrument as often as necessary. It is recommended that the instrument is wiped with a soft cloth moistened with a mild detergent solution. Spillages of liquid on the carriageway should be wiped off promptly as this may cause the Plate Carrier to drag during operation.

6.3.2 Pinch Valve Service

Occasionally the tube passing through the pinch valve becomes permanently closed, i.e. it will not return to its normal shape when the valve opens in use. This tends to happen after extended periods of non-operation.

To unpinch, locate the valve under the stainless steel assembly holding the Wash Head. Pull the tube gently through the pinch valve a few millimetres; the valve will now pinch in a new position.
If the Washer is now run, liquid will flow normally. It may be necessary to replace the tube after extended periods of use due to fatigue.

6.3.3 Unclogging Tips
It is possible that the dispense/aspirate tips of the Wash Head may become clogged with salt deposits. To clear them, switch OFF the Washer, lift up the Wash Head Assembly and unclog the tips using the small declogging tool provided.

6.4 Fault Finding

In case of technical problems use the following trouble shooting list to diagnose the fault and restore the instrument to working order.

Problem	Possible Cause	Solution
No POWER ON indicator	Mains lead not connected	Connect lead to an appropriate supply
	Fuse blown	Replace fuse
	Pump Unit POWER switch is OFF	Switch POWER switch ON
VAC FAIL illuminated	Air leaks	Check Bottle Caps for leaks and tighten as required
	Constricted Tubing	Check tubing for kinks
	Pump failure	Check that the Pump Unit is switched ON
		Check that the Pump Unit is connected to the Washer Unit correctly
		Check Pump Unit fuse and replace if required
Carrier does not move when START is pressed	Program Card not inserted	Insert Program Card

Problem	Possible Cause	Solution
No delivery of Wash Reagent into wells	Silicon tube in pinch valve constantly pinched	Pull tubing through valve and reform (See 6.3.2)
	Air leaks at Reagent Bottle cap	Tighten cap, replace gasket if necessary
	Tubing leaks	Check tubing and tube connectors
Unequal dispensing or aspirating of Wash Reagent	Microplate incorrectly positioned on Plate Carrier	Check and adjust position of Plate Carrier
	Strips incorrectly installed in holder	Check that strips are correct and adjust as necessary
	One or more dispense tips clogged	De-clog Washer Tip(s) (See 6.3.3)
Over-filling of wells during washing	Wash Head height requires adjustment	Using spanners supplied adjust the Wash Head height by loosening the lock nut, lowering the domed nut and locking in position on the Head Lift Rod (See 4.3.3)

6.5 Fuse Replacement

Switch off the Washer and disconnect the mains supply cord. Locate the fuse holder at the rear of the Wash and Pump Units. Using a coin or similar tool, remove the fuse holder cap. Remove the faulty fuse and discard. Ensure that the replacement has the same rating as appears on the rating label on the rear of the Pump Unit. Reconnect the Washer to the mains supply. If the fuse blows again contact the authorised service. (See section 6.6. below)

NOTE: Ensure that only fuses with the required rated current and of the specified type are used for replacement. The use of makeshift fuses and the short-circuiting of fuseholders is prohibited.

6.6 Service Requests

Should this instrument require service attention or if replacement parts are needed, please contact:

Labsystems Oy
Technical Services
Sorvaajankatu 15
00810 HELSINKI
FINLAND

Tel: +358 9 329100
Fax: +358 9 32910409

or the local authorized Labsystems Distributor or Service agent.

Labsystems ...because science needs standards

Manufacturer's Name:
Labsystems Oy
Research Systems Division

Manufacturer's Address:
Sorvaajankatu 15, P.O.Box 8
FIN-00881 Helsinki,
FINLAND.
Tel. +358-9-329100
Telefax +358-9-32910415

Distributed by:

Thermo SCIENTIFIC

Wellwash®

Thermo Scientific Wellwash® 4 Mk 2

User Manual

Rev. 2.3, Cat. no. 1507340

Thermo Scientific Wellwash 4 Mk 2, Cat. no. 5160772 (115 V), 5160770 (230 V) or 5160771 (100 V)

User Manual Rev. 2.3; August 2007, Cat. no. 1507340

Copyright

Copyright © 2007 Thermo Fisher Scientific. All rights reserved. Printed in Finland. Reproduction of the accompanying user documentation in whole or in part is prohibited.

Trademarks (® and ™)

Wellwash is a registered trademark of Thermo Fisher Scientific.
All other trademarks and registered trademarks are the property of their respective holders.

Disclaimer

Thermo Fisher Scientific reserves the right to change its products and services at any time to incorporate technological developments. This manual is subject to change without prior notice as part of a continuous product development. Although this manual has been prepared with every precaution to ensure accuracy, Thermo Fisher Scientific assumes no liability for any errors or omissions, or for any damages resulting from the application or use of this information. This manual supersedes all previous editions.

No liability for consequential damages

Thermo Fisher Scientific shall not be liable for any damages whatsoever arising out of the use or inability to use this product.

Contact information

Thermo Fisher Scientific Oy
P.O. Box 100, FI-01621 Vantaa, Finland
Tel. +358-9-329 100, Fax +358-9-3291 0415
www.thermo.com

Table of Contents

1 Safety Symbols and Markings 7
2 About the User Manual 8
3 Introduction to the Wellwash 4 Mk 2 9
4 Functional Description 11
5 Installation 13
6 Operation 26
7 Maintenance 36
8 Troubleshooting 49
9 Technical Specifications 55
10 Ordering Information 57
11 Warranty Certificate 58
12 Index 59
13 Glossary and Abbreviations 63
Appendix A: Wellwash 4 Mk 2 Quick Reference Guide 64
Appendix B: Certificate of Decontamination 65
Appendix C: Wellwash 4 Mk 2 Feedback Form 66
Appendix D: Addresses 67
Notes 68

Table of Contents

1 Safety Symbols and Markings ... 7

2 About the User Manual ... 8

3 Introduction to the Wellwash 4 Mk 2 ... 9
3.1 Intended use ... 9
3.2 Principle of operation ... 9
3.3 Advantages of using Wellwash 4 Mk 2 ... 9

4 Functional Description ... 11
4.1 Controls and indicators ... 12

5 Installation ... 13
5.1 Installation check list ... 13
5.2 What to do upon delivery ... 13
5.2.1 How to unpack ... 13
5.2.2 Checking delivery for completeness ... 14
5.2.3 Checking for damage during transport ... 15
5.2.4 Environmental requirements ... 16
5.2.5 Things to avoid ... 16
5.2.6 Technical prerequisites ... 16
5.3 Installation procedure ... 17
5.3.1 How to install the pump unit and washer unit connections ... 19
5.3.2 Wash head height ... 23
5.3.3 Mains supply cable ... 24
5.3.4 Changing wash heads ... 24
5.4 Operational check ... 24

6 Operation ... 26
6.1 Operational checklist ... 26
6.2 Washing a microplate ... 27
6.3 Priming procedure ... 29
6.4 Adding wash reagent ... 30
6.5 Program selection ... 31
6.5.1 Two-way switch functions ... 32
6.5.2 Rotary switch functions ... 33
6.6 Resetting ... 35
6.7 Shutdown procedure ... 35
6.7.1 Daily shutdown procedure ... 35
6.7.2 Long-period shutdown ... 35
6.8 Emergency situations ... 35

7 Maintenance ... 36
7.1 Regular and preventive maintenance ... 36
7.1.1 Service contracts ... 36
7.1.2 Maintenance check list ... 36
7.1.3 General ... 36
7.1.4 Immediate ... 37
7.1.5 Tubing ... 37
7.1.6 Reagent / waste bottles ... 37
7.1.7 Liquid trap bottle ... 38

7.1.8 Pinch valve ... 42
7.1.9 Unclogging tips ... 43
7.1.10 Fuse replacement ... 44
7.2 Disposal of materials ... 46
7.3 Decontamination procedure ... 46
7.3.1 How to decontaminate the instrument ... 46
7.4 How to pack for service ... 47
7.4.1 Packing ... 48
7.5 Disposal of the instrument ... 48

8 Troubleshooting ... 49
8.1 Troubleshooting guide ... 49
8.2 Service request protocol ... 52
8.3 Limitations, warnings and cautions ... 52
8.3.1 Liquid reservoir – IMPORTANT ... 52
8.3.2 Electrical ... 52
8.3.3 Mechanical and environmental ... 53
8.4 Defects and abnormal stresses ... 54
8.5 Before operation ... 54
8.5.1 Installation ... 54
8.5.2 In operation ... 54
8.6 Cleanliness ... 54

9 Technical Specifications ... 55
9.1 General specifications ... 55
9.2 Safety specifications ... 56
9.3 In conformity with the requirements ... 56

10 Ordering Information ... 57
10.1 List of accessories ... 57
10.2 List of recommended spare parts ... 57

11 Warranty Certificate ... 58
11.1 Warranty limitations ... 58

12 Index ... 59

13 Glossary and Abbreviations ... 63
13.1 Keywords for web pages ... 63
13.2 Literature ... 63

Appendix A: Wellwash 4 Mk 2 Quick Reference Guide ... 64

Appendix B: Certificate of Decontamination ... 65

Appendix C: Wellwash 4 Mk 2 Feedback Form ... 66

Appendix D: Addresses ... 67

Notes ... 68

List of Figures

Fig. 4.1 Wellwash 4 Mk 2 microplate washer ... 11
Fig. 4.2 Keypad ... 12
Fig. 5.1 Accessories included with the instrument ... 14
Fig. 5.2 Spare tubing ... 15
Fig. 5.3 Wash arm assembly tubing ... 15
Fig. 5.4 Location of the frequency selector switch and the transit screws ... 17
Fig. 5.5 Pinch valve holder ... 18
Fig. 5.6 Installing the O rings to the wash head holders ... 18
Fig. 5.7 Sliding the wash head between the holders ... 19
Fig. 5.8 Pump unit with tubes installed ... 19
Fig. 5.9 Liquid level sensor system ... 20
Fig. 5.10 Removing the plastic caps ... 21
Fig. 5.11 Connection of pump and washer units ... 21
Fig. 5.12 Opening and closing the bottle ... 22
Fig. 5.13 Correct position of the plate carrier ... 22
Fig. 5.14 Loosening the locknut with spanners ... 23
Fig. 5.15 Changing the wash head ... 24
Fig. 5.16 Placing the microplate with 12-way and 8-way wash head ... 25
Fig. 6.1 Releasing the pressure from the wash bottle ... 30
Fig. 6.2 Preprogrammed card: three washes with a 12-way wash head ... 31
Fig. 6.3 Programmable switch card ... 32
Fig. 7.1 Liquid level sensor and liquid trap bottle cover ... 38
Fig. 7.2 Opening the liquid trap bottle cover ... 39
Fig. 7.3 Pulling the thick tube out of the liquid trap bottle ... 40
Fig. 7.4 Pulling the thin tube out of the liquid trap bottle ... 40
Fig. 7.5 Opening the liquid trap bottle ... 41
Fig. 7.6 Unpinching the tube ... 42
Fig. 7.7 De-clogging the wash head ... 43
Fig. 7.8 Opening the fuse holder of the washer unit ... 44
Fig. 7.9 Washer unit fuse and fuse holder ... 44
Fig. 7.10 Opening the fuse holder of the pump unit ... 45
Fig. 7.11 Pump unit fuse holder opened ... 45

List of Tables

Table 5.1 Installation check list ... 13
Table 5.2 Silicon tubing color-codes ... 19
Table 6.1 Operational checklist ... 26
Table 6.2 Number of washes after a soak period ... 33
Table 6.3 Aspiration after the final wash ... 33
Table 6.4 Soak period (in minutes) ... 33
Table 6.5 Pause (in seconds) between each washing cycle ... 34
Table 6.6 Number of washes before soaking ... 34
Table 6.7 Washing volume (in µl) ... 34
Table 7.1 Maintenance check list ... 36
Table 8.1 Troubleshooting list ... 50

1 Safety Symbols and Markings

These symbols are intended to draw your attention to particularly important information and alert you to the presence of hazards as indicated.

Safety symbols and markings used on the Wellwash 4 Mk 2

	Power ON
	Power OFF
SN	**Serial number**
REF	**Catalog number**
	Date of manufacture
	Consult Instructions for Use
IVD	**In Vitro Diagnostic Medical Device**
	WEEE symbol This product is required to comply with the European Union's Waste Electrical & Electronic Equipment (WEEE) Directive 2002/96/EC.

Warning markings used in the documentation

Warning:	Risk of electric shock.
Warning:	Biohazard risk.
Warning:	Risk of injury to the user(s).
Caution:	Risk of damage to the instrument, other equipment or loss of performance or function in a specific application.

Other markings used in the documentation

Note:	Marks a tip, important information that is useful in the optimum operation of the system, or an item of interest.

2 About the User Manual

This User Manual has been written for the actual user (e.g., laboratory technician) and provides information on the Thermo Scientific Wellwash 4 Mk 2 microplate strip washer, including installation and operating instructions.

Read the manual in its entirety prior to operating the instrument.

This User Manual has been designed to give you the information you need to:

- Review safety precautions
- Install the Wellwash 4 Mk 2
- Carry out washing procedures
- Perform basic maintenance procedures
- Troubleshoot the instrument performance
- Maintain the instrument

This User Manual also describes features and specifications of the Wellwash 4 Mk 2 hardware and on-board software.

Chapter 6 explains the operating procedures.

The user should be familiar with the contents of Chapter 7 on maintenance procedures that may be performed by the user.

For warranty and ordering information, refer to Chapters 10 Ordering Information and 11 Warranty .

3 Introduction to the Wellwash 4 Mk 2

The Wellwash 4 Mk 2 is a semiautomatic microplate washer, comprising pump and washer units. The instrument is supplied with both 8- and 12-way wash heads, four program cards and an accessory pack.

Your local Thermo Fisher Scientific representative can arrange instrument training at the commissioning of the instrument for extra charge, if required.

3.1 Intended use

The Wellwash 4 Mk 2 is a microplate washer for 96-well plates. It can be used in research or routine-test laboratories by trained personnel to wash Microtiter microplates and strips in 96-well plate format that meet the SBS standards.

For verification of the entire system, it is recommended that Good Laboratory Practices (GLP) be followed to guarantee reliable analyses.

Use for self-testing is excluded.

If the analyzing performance is critical to the medical diagnosis, the diagnostic test result has to be ensured with internal quality contols or with an alternative test.

3.2 Principle of operation

The instrument provides the following wash functions initiated through the keypad and control switches or a preprogrammed wash card:

1. Liquid dispensing into wells (microplate or microstrip)
2. Liquid aspiration from wells (microplate or microstrip)

With their unique and proven design, the coaxial wash heads of the Wellwash 4 Mk 2 ensure excellent washing efficiency and low residual volumes of less than 5 µl. For clean delivery of washing buffer, the inner dispensing tubes are made of stainless steel. A continuous vacuum in the outer tube prevents cross contamination and ensures complete liquid removal.

For fast and accurate selection of routine protocols, the Wellwash 4 Mk 2 comes with four standard program cards (1 to 4 washing cycles) as well as a programmable card. This switch card permits a quick selection of all wash parameters, including soak times and final wash protocols.

The quick release bottle caps of the Wellwash 4 Mk 2 ensure easy buffer changes. An additional rinse bottle can be connected, making it easier to purge wash buffer from the wash head or change to a different wash buffer. Automatic pump shutdown reduces wear and noise levels. If unused for 30 seconds, the wash pump of the Wellwash 4 Mk 2 automatically switches off.

3.3 Advantages of using Wellwash 4 Mk 2

The Wellwash 4 Mk 2 provides several advantages relating mainly to the principle of operation in that it has:

- Unique coaxial wash heads for trouble-free washing and low residual volumes
- 8- and 12-way interchangeable wash heads
- Easy to program
- Excellent washing performance

- Quick release wash/waste bottle caps
- Automatic pump shutdown
- Effective liquid management

4 Functional Description

The Wellwash 4 Mk 2 is designed to wash wells in an 8 x 12 microplate. It comprises a pump unit and a washer unit (Fig. 4.1), which are connected by power, air and liquid lines.

The **pump unit** consists of a double-headed vacuum pump with high-density polythene reagent and waste bottles and a liquid trap. The main power ON/OFF switch is at the rear of the pump unit. The frequency selector switch is located on the bottom side of the pump model Cat. no. 5190771 near the transport locking screws.

The keypad is located on the left-hand side of the **washer unit** and the microprocessor and associated control electronics are housed under the keypad. The wash head is located above the plate carrier slideway, which can be either 8- or 12-way. The plate carrier moves the microplate accurately beneath the wash head and incorporates a priming reservoir at its leading edge. The plate carrier is indexed forward by means of a magnetic coupling to the drive system housed inside the washer.

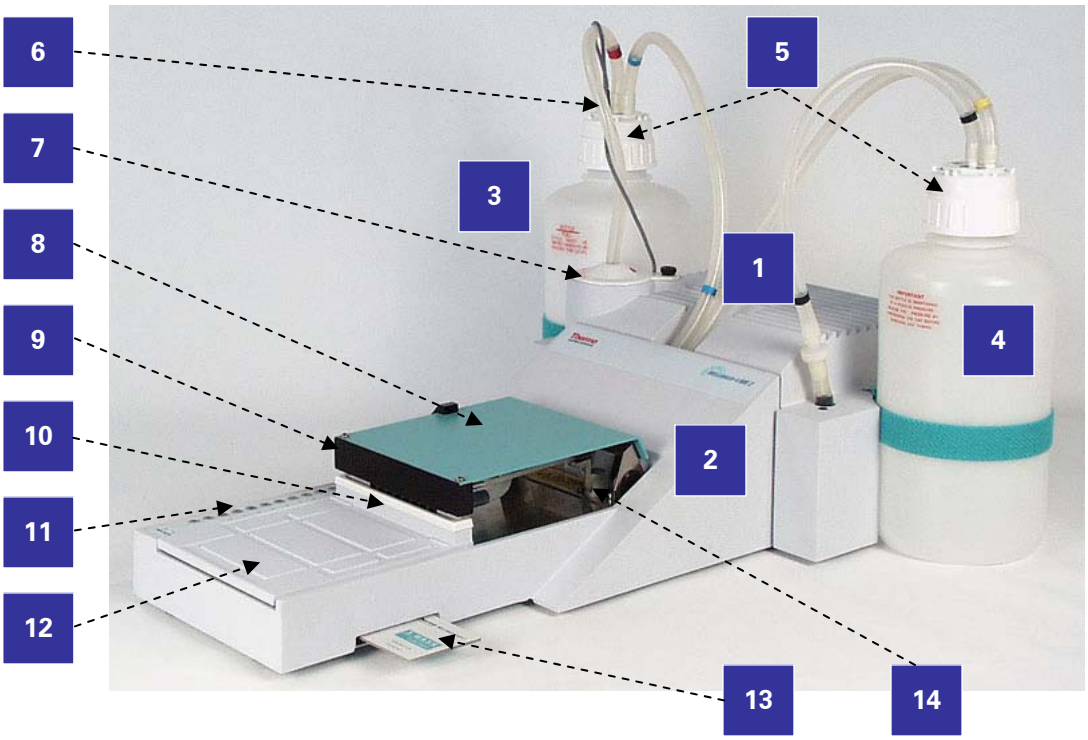

1. Pump unit
2. Washer unit
3. Waste bottle
4. Wash bottle
5. Bottle caps
6. Liquid level sensor
7. Liquid trap bottle
8. Wash arm assembly
9. Wash head and wash head holders
10. Priming reservoir
11. Keypad
12. Plate carrier
13. Program card
14. Pinch valve

Fig. 4.1 Wellwash 4 Mk 2 microplate washer

The pump creates pressure to the wash bottle (Fig. 4.1, item 4) allowing the wash liquid to be dispensed through the pinch valve (Fig. 4.1, item 14) into the microplate wells and a vacuum to the waste bottle (Fig. 4.1, item 3) to aspirate the used wash liquid into the waste bottle.

4.1 Controls and indicators

Here is a description of the controls and indicators on the Wellwash 4 Mk 2.

POWER ON/OFF switch

This two-position switch at the rear of the pump unit controls the electrical power to both the pump and washer units.

Fig. 4.2 Keypad

PRIME push button

A momentary action switch that starts the PRIME function. An audible tone will sound when pressed to confirm operation.

PRIME indicator

This yellow LED (light-emitting diode) located to the right of the PRIME button flashes to indicate that the PRIME function is required and, when continuously ON, indicates that the washer is primed and ready for use. The indicator will turn off after a while, but the instrument remains ready for use.

ROW SELECT (1 – 12) push buttons

These are momentary action switches that select the last row to be washed in any chosen program sequence. An audible tone will sound when pressed to confirm operation.

ROW SELECT indicators

These yellow LEDs located to the right of the ROW SELECT push buttons, when illuminated, indicate the rows selected for washing.

START push button

This momentary action switch initiates the wash cycle. An audible tone will sound when pressed to confirm operation.

RESET push button

When pressed, the RESET button will reset the washer to its pre-programmed state. An audible tone will sound when pressed to confirm operation.

POWER indicator

This green LED is located at the bottom left of the keypad and, when illuminated, indicates that the POWER switch is ON.

VAC FAIL indicator

A yellow LED which, when flashing, indicates that the waste bottle is full or that there is a vacuum failure.

5 Installation

5.1 Installation check list

The section on installation will contain an outline of the points mentioned in the check list below.

Table 5.1 Installation check list

Tick	Item
❑	Unpack the Wellwash 4 Mk 2 instrument carefully. Refer to 5.2.1. Keep the original packaging and packing material for future transportation.
❑	Check the delivery for completeness. Refer to 5.2.2.
❑	Check for damage during transport. Refer to 5.2.3.
❑	Place the instrument on a normal laboratory bench taking into account both the environmental and technical prerequisites. Refer to 5.2.4 and 5.2.6. Leave sufficient clearance on both sides and at the rear of the unit.
❑	Install the instrument:
❑	Remove the transit screws. Refer to 5.3, step 1.
❑	Check the voltage and frequency of the electrical supply. Refer to 5.3, step 2.
❑	Remove the pinch valve holder. Refer to 5.3, step 4.
❑	Install the wash head. Refer to 5.3, steps 5 and 6.
❑	Connect the tubing and the liquid level sensor cord to the pump unit. Refer to 5.3.1, steps 1 to 5.
❑	Connect the washer unit to the pump unit. Refer to 5.3.1, steps 6 and 7.
❑	Fill the wash bottle and tighten both bottle caps. Refer to 5.3.1, steps 8 and 9.
❑	Slide the plate carrier to its place. Refer to 5.3.1, step 10.
❑	Connect the mains supply cable (cord) to the mains input socket. Refer to 5.3.2.
❑	Carry out the operational check. Refer to 5.4.

5.2 What to do upon delivery

5.2.1 How to unpack

Move the unpacked instrument to its site of operation. Unpack the Wellwash 4 Mk 2 instrument and accessories carefully with the arrows on the transport package pointing upwards. The following notes and instructions are sent with the instrument and are immediately available when you open the package:

- the Warranty Certificate card
- the packing instructions/packing list
- the Transportation discrepancy report
- the User Manual

Caution: DO NOT touch or loosen any screws or parts other than those specially designated in the instructions. Doing so might cause misalignment and will invalidate the instrument warranty.

Fig. 4.1 shows the pump and washer units in their entirety.

Lift out the washer and pump units, removing the shaped packing pieces from around the washer, and place them on a flat level surface.

To lift the instrument, put your fingers under the bottom on both sides and lift it with your back straight. The net weight of the instrument is 10 kg (22 lbs.).

Caution: When unpacking the instrument, it is recommended that two people lift the instrument together, taking proper precautions to avoid injury.

Retain the original packaging and packing material for future transportation. The packaging is designed to assure safe transport and minimize transit damage. Use of alternative packaging materials may invalidate the warranty. Also, retain all instrument-related documentation provided by the manufacturer for future use.

Note: Before use remember to remove the transit screws at the bottom of the instrument and save them in the adjoining screw holes (marked with the text "Transit screw storage"). Remove and save the pinch valve holder until needed for future transportation of the instrument.

5.2.2 Checking delivery for completeness

Check the enclosed packing list against order. In case of any deviations, contact your local Thermo Fisher Scientific representative or Thermo Fisher Scientific Oy.

The instrument is supplied with both 8- and 12-way wash heads, four program cards, the user manual, the mains supply cable and an accessory pack. The content of the accessory pack is shown in Fig. 5.1 and Fig. 5.2. Store the accessories in their bags until you need them.

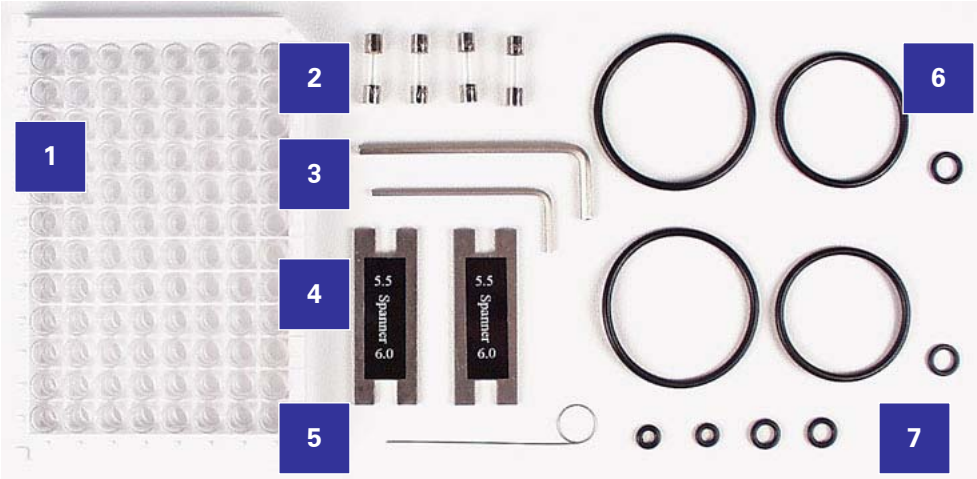

1. Combiplate
2. 4 spare fuses (see Section 7.1.10 Fuse replacement)
3. 2 Allen keys (see Section 5.3 Installation procedure, step 1)
4. 2 spanners (see Section 5.3.2 Wash head height)
5. De-clogging tool (see Section 7.1.9 Unclogging tips)
6. 6 spare O rings for the bottle caps
7. 4 spare O rings (see Section 5.3 Installation procedure, step 5)

Fig. 5.1 Accessories included with the instrument.

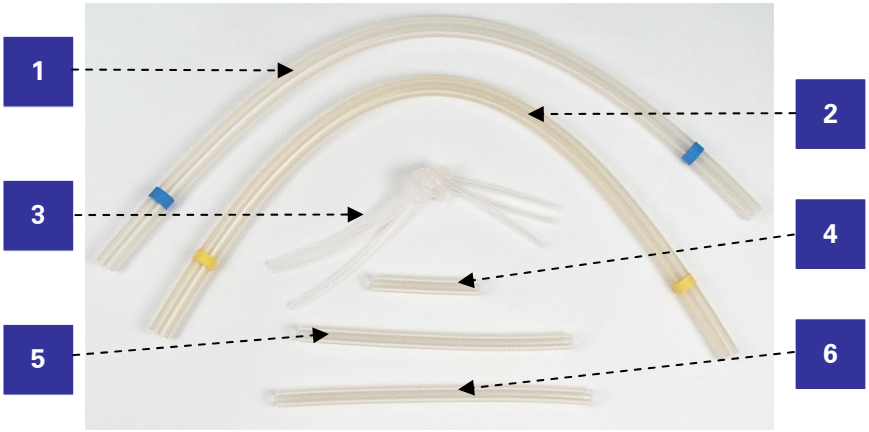

1. Waste liquid spare tube
2. Reagent liquid spare tube
3. Pinch valve spare tubes (item 3 in Fig. 5.3) (see Section 7.1.8 Pinch valve)
4. Wash arm assembly spare tube (item 2 in Fig. 5.3)
5. Wash arm assembly spare tube (item 4 in Fig. 5.3)
6. Wash arm assembly spare tube (item 1 in Fig. 5.3)

Fig. 5.2 Spare tubing

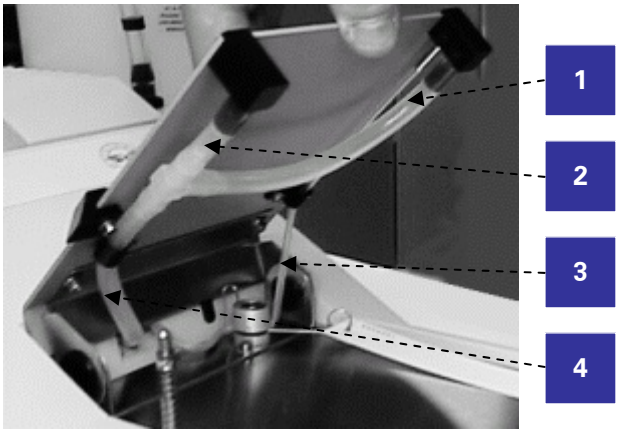

Fig. 5.3 Wash arm assembly tubing

5.2.3 Checking for damage during transport

Visually inspect the transport package, the instrument and the accessories for any possible transport damage.

If the carton has been damaged in transit, it is particularly important that you retain it for inspection by the carrier in case there has also been damage to the instrument.

Neither the manufacturer nor its agents can be held responsible for any damage incurred in transit, but the manufacturer will make every effort to help obtain restitution from the carrier. Upon receipt of the carrier's inspection report, arrangements will be made for repair or replacement.

Visually check all interconnections in the basic instrument. Check that there are no loose parts inside the instrument.

If any parts are damaged, contact your local Thermo Fisher Scientific representative or Thermo Fisher Scientific Oy.

5.2.4 Environmental requirements

When you set up your Wellwash 4 Mk 2, avoid sites of operation with excess dust, vibrations, strong magnetic fields, direct sunlight, draft, excessive moisture or large temperature fluctuations.

- Make sure the working area is flat, dry, clean and vibration-proof and leave additional room for accessories, cables, wash bottles, etc.
- Leave sufficient space (at least 10 cm) on both sides and at the back of the unit to allow adequate air circulation.
- Make sure the ambient air is clean and free of corrosive vapors, smoke and dust.
- Make sure the ambient temperature range is between +5°C (41 F) and +40°C (104 F), preferably between +15°C (59 F) and +25°C (77 F).
- Make sure relative humidity is between 10% and 90% (non-condensing).

Note: The use of the instrument in strong, direct sunlight or next to radiators and other heat sources may markedly increase the temperature prevailing at the instrument. This should be taken into account when deciding where the instrument should be located and operated.

The Wellwash 4 Mk 2 does not produce operating noise at a level that would be harmful. No sound level measurements are required after installation.

Warning: DO NOT operate the instrument in an environment where potentially damaging liquids or gases are present.

5.2.5 Things to avoid

DO NOT smoke, eat or drink while using the Wellwash 4 Mk 2. Wash your hands thoroughly after handling test fluids. Observe normal laboratory procedures for handling potentially dangerous samples. Use proper protective clothing. Use disposable gloves. Be sure the working area is well ventilated.

Never spill fluids in or on the equipment.

Only use the instrument for its intended purpose. Refer to Section 3.1.

5.2.6 Technical prerequisites

The washer and pump units require no special site preparations. A normal laboratory bench close to a mains supply socket is quite suitable. The net weight of the instrument is 10 kg (22 lbs.).

Check that the voltage label on the rear panel of the pump unit conforms to the supply voltage used in the laboratory. The instrument operates at voltages of 100 – 120 Vac, 220 – 240 Vac and the frequency range 50/60 Hz (see Section 5.3, step 2).

5.3 Installation procedure

Any suitably skilled person using standard tools may carry out the following procedure.

1. Rest the pump unit on its side and remove the transit screws (the Allen cap head type is painted red) using the key supplied (Fig. 5.1, item 5). Relocate them in the retaining holes provided (Fig. 5.4).

Note: When relocating this instrument or returning it for repair, it is essential that the transit screws are refitted. **Failure to do so could invalidate the warranty.**

2. Ensure that the pump mains switch is in the OFF position. After checking that the electrical supply conforms to that specified on the voltage label on the rear panel of the unit, slide the frequency selector switch (in the pump model Cat. no. 5160771) to the 50 Hz or 60 Hz position depending on the mains supply voltage frequency (Fig. 5.4). (Other pump models do not include a frequency selector.)

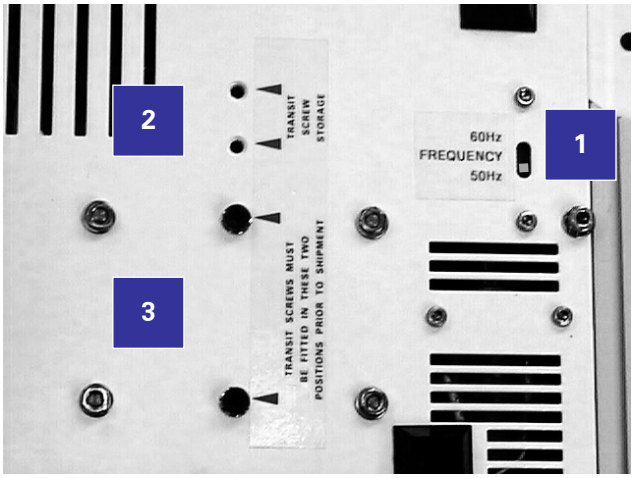

1. Location of the frequency selector switch
2. Retaining holes for the transit screws
3. Transit screws during transportation

Fig. 5.4 Location of the frequency selector switch and the transit screws

3. Turn the pump unit back to its normal position.

4. Lift the wash arm assembly (the stainless steel cover). Remove the pinch valve holder (Fig. 5.5) before use. Store the wire holder for future use.

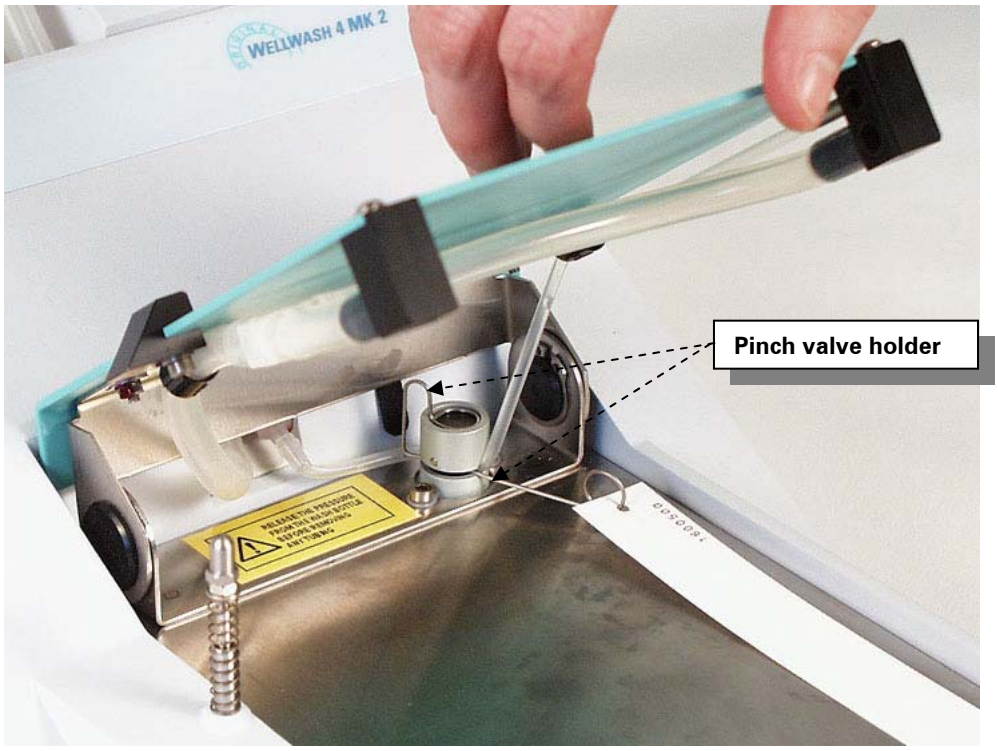

Fig. 5.5 Pinch valve holder

Note: The wash heads are packed separately. Install them before use.

5. Install first the four (4) small O-rings to the wash head holders, two (2) on both sides (Fig. 5.6).

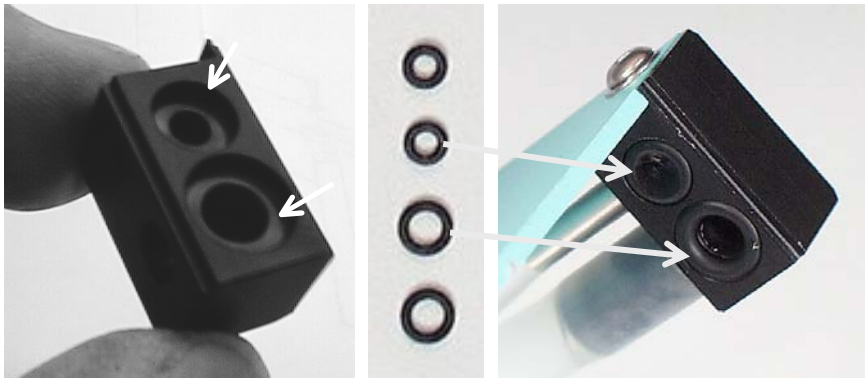

Fig. 5.6 Installing the O rings to the wash head holders

6. Slide the wash head between the holders (Fig. 5.7).

Note: The wash heads will only fit into the end slots when the raised flange on the wash head is facing the front.

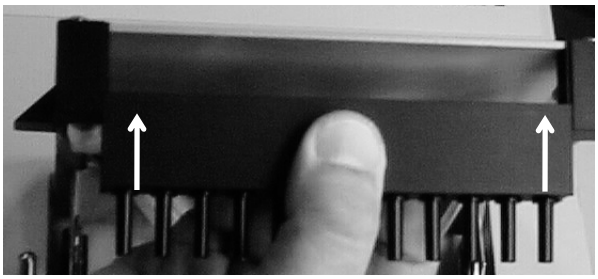

Fig. 5.7 Sliding the wash head between the holders

5.3.1 How to install the pump unit and washer unit connections

Fig. 5.8 Pump unit with tubes installed

1. The wash bottle with the black connections is located on the right-hand side of the pump unit and the waste bottle to the left. All the tubing and connections are color coded to ensure correct connection (Table 5.2).

Table 5.2 Silicon tubing color-codes

Black	●	Pressure feed from the pump to the wash bottle
Yellow	●	Pressuring wash reagent from the wash bottle to the washer unit
Red	●	Vacuum feed from the pump to the waste bottle
Blue	●	Waste feed from the washer unit to the waste bottle

2. Connect the pressure feed from the pump on the right to the wash bottle using the black-coded tube.
3. Connect the vacuum feed tube (red) from the pump to the waste bottle (Fig. 5.9, item 2).
4. Connect the liquid level sensor cord from the liquid trap bottle to the waste bottle. Make sure the black connector is firmly in place (Fig. 5.9, item 1).

Caution: The liquid level sensor does not function if the connector is not properly inserted: the black connector has to be pushed down all the way. The waste bottle may otherwise overfill and cause the liquid trap bottle to start filling. If at that point the liquid trap bottle is not emptied, the overflowing waste liquid can enter the pump unit and damage it.

1. Liquid level sensor connector
2. Vacuum feed tube
3. Liquid trap bottle cover

Fig. 5.9 Liquid level sensor system

5. Check that the tubes are properly connected to the pinch valve under the wash arm assembly on the washer unit (Fig. 4.1, item 14). The thin tube going through the valve should not be pinched by the edges of the valve.

6. Remove the three (3) black plastic caps from the hose connectors and the pump control at the rear of the washer unit (Fig. 5.10).

Fig. 5.10 Removing the plastic caps

7. Slide the two units together until the locating dowel and electrical connectors are firmly engaged (Fig. 5.11).

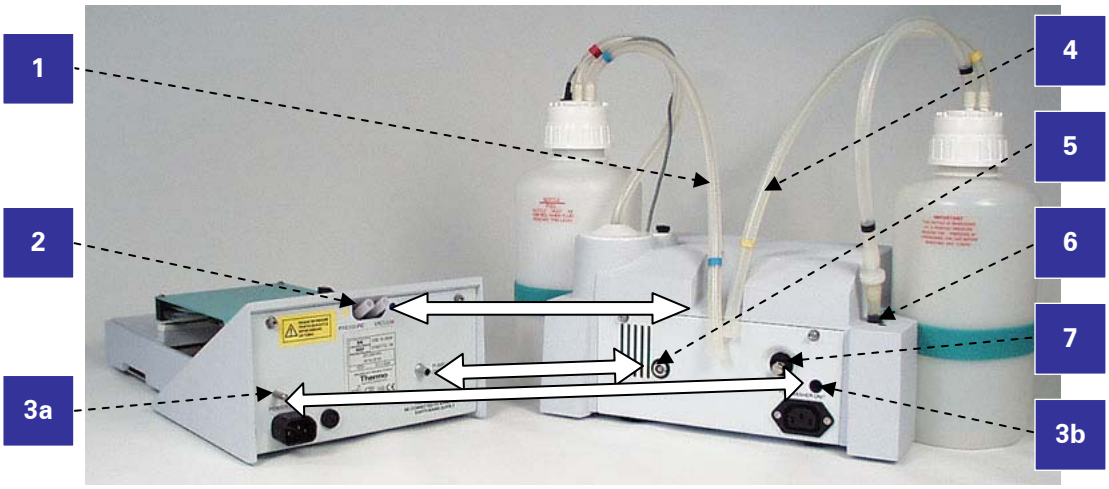

1. Silicone tube (waste, blue color code)
2. Manifold pipes (PRESSURE for reagent tube/yellow, VACUUM for waste tube/blue)
3. Locating pin (a) and friction bush (b)
4. Silicone tube (wash, yellow color code)
5. Signal connectors (with text PUMP CONTROL)
6. Silicone tube (pressure, black color code)
7. Pump pressure adjustment screw (do not touch –for authorized service personnel only!)

Fig. 5.11 Connection of pump and washer units

8. Open the wash bottle (Fig. 4.1, item 4) by rotating the cap ring, while the white plug remains stationary. Lift the cap ring and open the plug. Fill the wash bottle up to the shoulder with wash reagent and reconnect ensuring that the plug mates correctly with the bottle insert (Fig. 5.12) and that the cap ring is tightly screwed down.

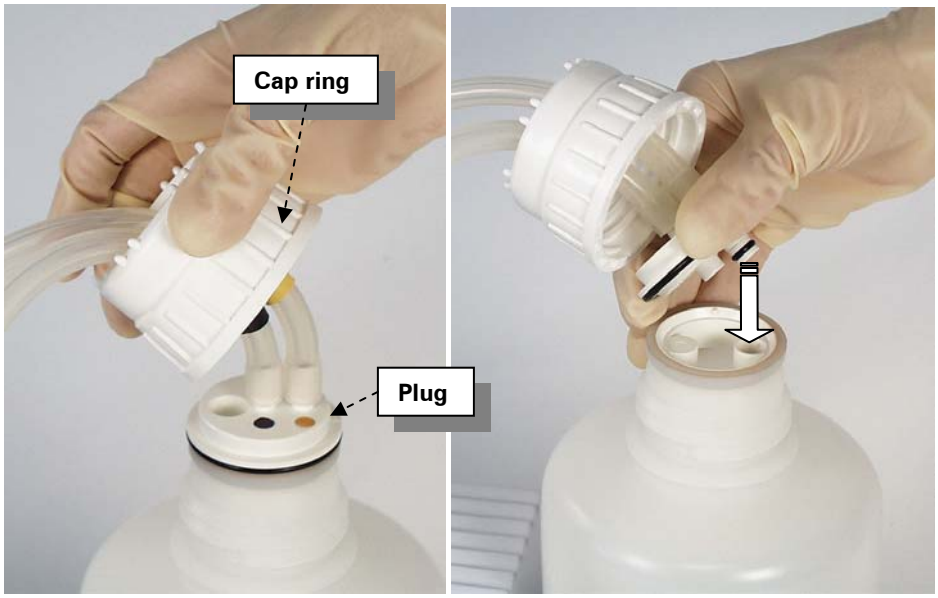

Fig. 5.12 Opening and closing the bottle

9. Tighten the cap on the waste bottle.
10. Lift the wash head and slide the plate carrier onto the stainless steel slideway so that the reservoir is under the wash head (Fig. 5.13).

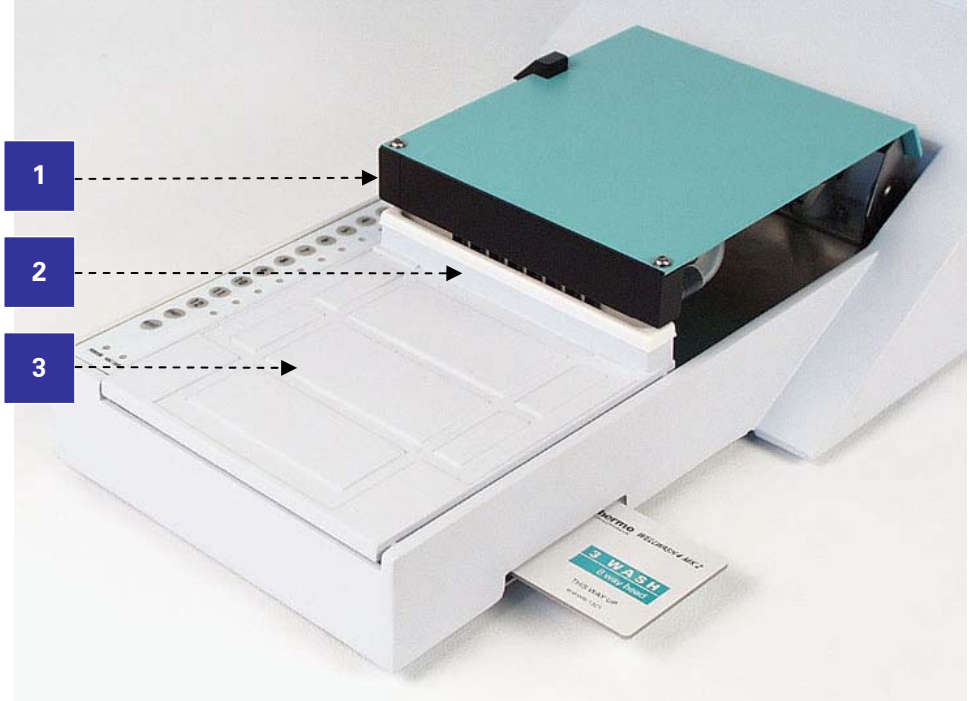

1. Wash head
2. Priming reservoir
3. Plate carrier

Fig. 5.13 Correct position of the plate carrier

5.3.2 Wash head height

To accommodate the differences in size and volume capacity of manufacturers' microplates, the height of the wash head is adjustable. This means that a positive meniscus can always be obtained without an unnecessary waste of wash reagent.

The wash head is factory-set at a nominal height to suit the most commonly used microplates. Should adjustment be required follow these instructions:

1. Make sure the wash bottle is empty to facilitate the adjustment. Start a simple wash routine and wait until the wash arm assembly starts to slide backwards. Turn OFF the instrument from the power switch at the back of the pump unit. The wash head is now in the **raised** position.
2. A stainless steel head lift rod is located on the left-hand side of the washer unit immediately above the keypad. There is a domed nut at the top of the rod with a locknut underneath.
3. Perform the adjustment using the two spanners 5.5/6.0 supplied with the instrument.

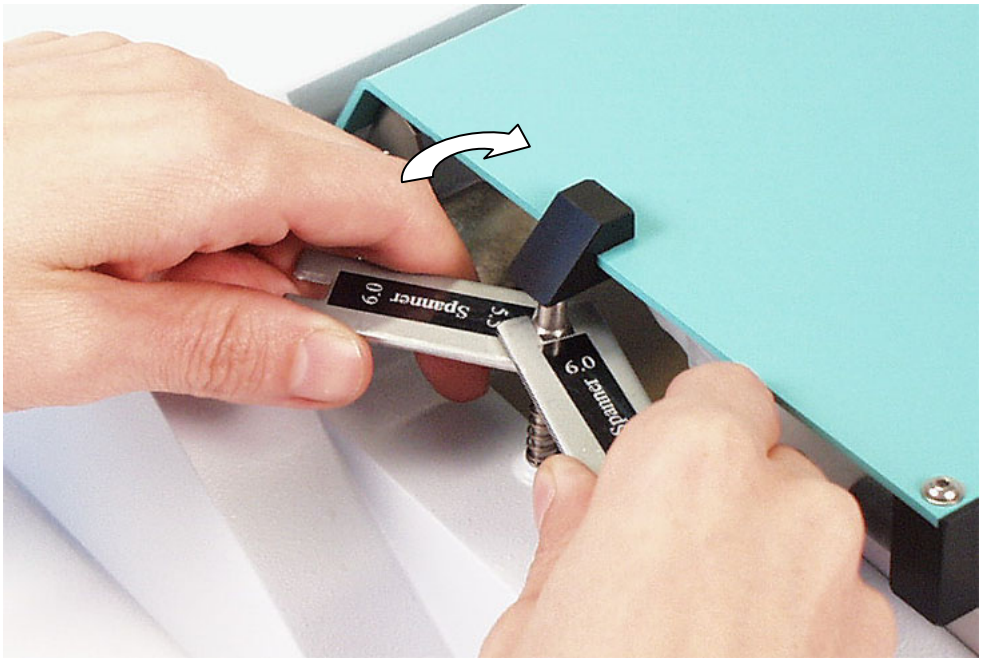

Fig. 5.14 Loosening the locknut with spanners

4. Loosen the locknut (Fig. 5.14) by keeping the 6.0-spanner stationary while turning the 5.5-spanner clockwise.
5. Adjust the height by rotating the domed nut, clockwise to lower the wash head and anticlockwise to raise the wash head.
6. Set the tips of the wash head to approx. 1.5 mm to 2.0 mm above the height of a microplate on the plate carrier, when the wash head is in the **raised** position.
7. Lock the domed nut into position with the locknut. When locking the domed nut into position, keep it still with the spanner 6.0 and only rotate the locknut anticlockwise using the spanner 5.5.

5.3.3 Mains supply cable

Warning: Never operate your instrument from a power outlet that has no ground connection. Never use a mains supply cable (cord) other than the Thermo Scientific mains supply cable designed for your region.

1. Ensure that the mains switch at the rear of the pump unit is in the **OFF** position.
2. Connect the mains supply cable (cord) to the mains input socket at the rear of the pump unit. If you need to use any other type of mains supply cable than supplied, use only cables certified by the local authorities.
3. Connect the instrument to a correctly installed line power outlet that has a protective conductor that is grounded (earthed).

5.3.4 Changing wash heads

You can change the wash head to either 8-way or 12-way. Lift the head assembly (Fig. 4.1, item 8), grasp the wash head (Fig. 4.1, item 9) at both ends and slide it down in the direction of the tips until it clears the end caps. Check that the two O rings in each end cap are in position and undamaged. To install the alternative wash head, slide it upwards onto the slots making sure that it is fully engaged (Fig. 5.7).

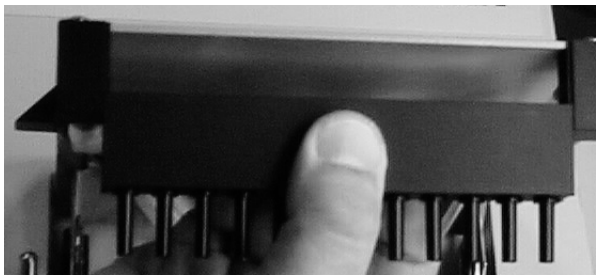

Fig. 5.15 Changing the wash head

Note: The wash heads will only fit into the end slots when the raised flange on the wash head is facing the front.

Remember to check the program card accordingly (8-way or 12-way).

5.4 Operational check

The following procedure should be completed to confirm the correct functioning of the washer prior to normal use.

1. Check that the wash head is correctly located by means of its guide slots in the head assembly (Fig. 5.7). The operational check is performed faster with the 12-way wash head.
2. Add approximately 2 to 3 dl of distilled aqua to the wash bottle and make sure that both bottle caps are firmly tightened.
3. Switch ON the mains power supply by depressing the POWER ON switch positioned on the rear panel of the pump unit.

   The POWER indicator on the keypad (Fig. 4.2) will be illuminated and a countdown sequence will begin on the row indicators. The row 12 indicator will illuminate first followed by row 11, row 10, row 9, and so on, at one-

second intervals until the PRIME indicator is reached. The pressure generation takes 10 seconds. The PRIME indicator continues flashing to prompt the user to prime the system.

4. Select the preprogrammed wash card for 1 wash and for the 12-way wash head. Plug it into the slot on the right-hand side of the washer unit (Fig. 4.1, item 13).
5. Lift the wash head and slide the plate carrier onto the stainless steel slideway so that the reservoir is under the wash head (Fig. 5.13).
6. The instrument should now be primed. Press the PRIME button to initiate the sequence. The wash head will lift and the pinch valve will open for one second allowing wash fluid to flow into the priming reservoir. The wash head will then lower itself to empty the prime reservoir. The PRIME indicator will turn off when the priming is complete.

   If no further key entry is made within ten (10) seconds of priming, the pump will automatically switch OFF. The instrument will then enter its idle state, waiting for instructions from the keypad and program card.
7. Place a microplate onto the plate carrier. When using a 12-way wash head, the well A1 of the microplate should be positioned in the top left-hand corner. When using an 8-way wash head, the well A1 should be positioned in the top right-hand corner. See Fig. 5.16.

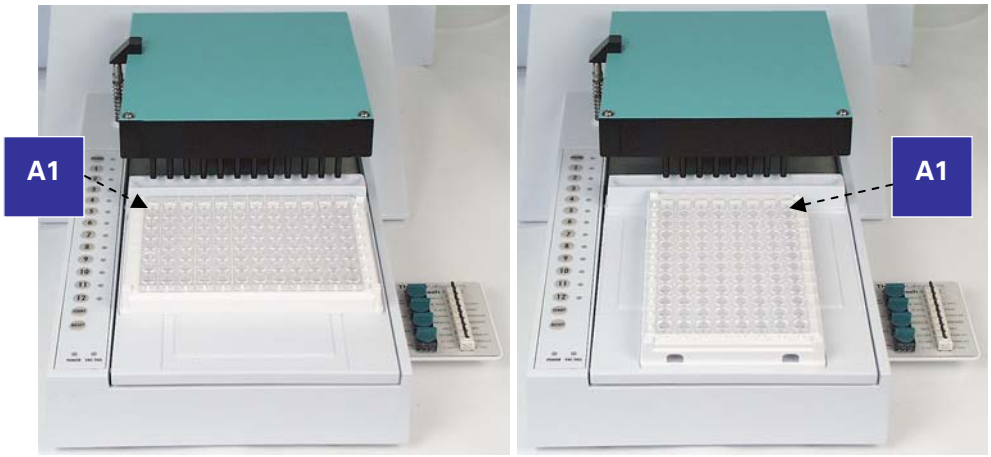

Fig. 5.16 Placing the microplate with 12-way and 8-way wash head

8. Select the row number of the last row to be washed on the keypad (e.g., when button 4 is pressed, rows 1 to 4 will be washed).

Note: When the 12-way program card is installed, buttons 9 to 12 are inoperative.

9. Press the START button to set the washing cycle into operation. The plate carrier will be drawn into the washer, filling and aspirating each row according to the sequence selected on the program card. At the end of a sequence, rows will be left substantially dry and the plate carrier will stop with the priming reservoir under the wash head.
10. The instrument is performing properly, if the wells are dry. If they are not, check that both bottle caps are firmly closed

6 Operation

6.1 Operational checklist

Table 6.1 Operational checklist

Tick	Item
❑	Fill the wash bottle with appropriate washing reagent.
❑	Select the program card and insert it.
❑	When using the programmable switch card, check the settings.
❑	Switch the instrument ON.
❑	Prime the instrument.
❑	Place a microplate onto the plate carrier.
❑	Select the row number of the last row to be washed.
❑	Start the wash sequence.
❑	When the wash sequence has finished, remove the microplate.
❑	Shut down the instrument.

The following symbols are used in the flowchart below:

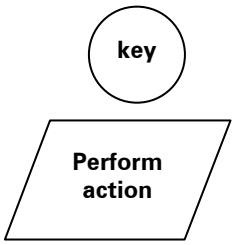

Press the key.

Indicates the actions you should take.

6.2 Washing a microplate

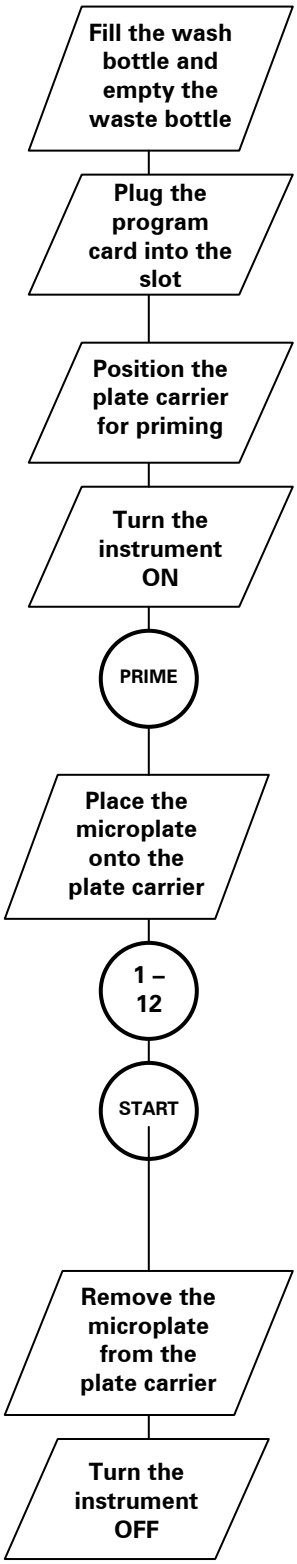

Ensure that the instrument is switched OFF.

Open the wash bottle cap (Fig. 6.1) very carefully to release any residual pressure. Let the hissing sound end prior to opening the cap all the way. Fill the wash bottle with appropriate washing reagent and tighten the bottle cap firmly (see Fig. 5.12).

Select either one of the preprogrammed wash cards or the programmable switch card (see Section 6.5).

Before inserting any program card, ensure that it is clean and dry. Wiping the surfaces with a soft dry cloth will suffice. If any liquid is present on the card, a malfunction of the program may occur.

Position the plate carrier on its slideway with the priming reservoir to the rear under the wash head (see Fig. 5.13).

The POWER indicator on the keypad (Fig. 4.2) illuminates and a countdown sequence will begin on the row indicator LEDs.

The PRIME indicator flashes until you prime the system (Section 6.3).

The priming function is complete when the PRIME indicator turns OFF.

If no further key entry is made within fifteen seconds of priming, then the pump will automatically switch OFF. The instrument will then enter the idle state, waiting for instructions from the keypad and program card.

Check that the correct wash head (8-way or 12-way) is fitted.

Check that the plate is placed properly onto the plate carrier (Fig. 5.16).

Select the row number of the last row to be washed. If no row is selected, the whole plate will be washed.

The instrument performs the wash sequence.

After pressing the START button, there may be a delay of up to 15 seconds before the run begins to allow the reagent and waste bottles to reach the working pressure.

The plate carrier will advance into the washer aspirating and filling selected rows in the sequence determined by the program card fitted. On completion of the protocol, the plate carrier will come to rest with the wash head lowered into the priming reservoir.

Warning: If the instrument is used in a manner not specified by the manufacturer, the protection provided by the instrument may be impaired. See Section 9.1 General specifications.

Caution: Handle the microplate with care to avoid any contamination of the instrument and the subsequent specimens. The contamination of the specimen will lead to incorrect results.

If the contents of the microplate does spill, however, follow the decontamination procedure presented in Section 7.3. Also, follow the system supplier's instructions in regard to the reagent kit and specimen handling in the event of contamination.

Warning: Never open the wash bottle, detach any of the tubing or press the black top of the pinch valve without first releasing the pressure by slightly opening the bottle cap. Let the hissing sound end prior to opening the cap all the way.

Warning: If you are using a washing reagent that is either volatile or splashes easily, keep yourself at a safe distance from the instrument while it is operating to avoid exposure. Place the instrument into a fume hood.

Warning: When washing microplates with samples of human or animal origin, keep yourself at a safe distance from the instrument while it is operating to avoid exposure. Place the instrument into a fume hood.

Note: If the pump fails to start or if the bottle caps are loose, an audible warning will be heard and the VAC FAIL indicator will illuminate. This condition will clear once the pump has started. If the VAC FAIL indicator does not clear after the pump has started, the RESET key must be depressed. Also, check that the waste bottle is not full.

Note: The priming procedure must be repeated whenever the POWER switch has been engaged or if there has been an interruption of the power supply.

Caution: Make sure that sufficient reagent is present in the wash bottle to complete the required protocol. See Fluid consumption in Section 9.1 General specifications.

Caution: If you use the programmable switch card, ensure that the **8 WAY – 12 WAY** switch is in the correct position (for either the 8-way or the 12-way wash head).

Caution: If removable-well microplates are being used, make sure that there are no missing wells in the rows to be washed **and that all the wells are at the same level**.

Note If you press the RESET button on the keypad at any stage, this will stop the immediate washing sequence and reset the system to its pre-programmed state.

Caution: DO NOT smoke, eat or drink while using the Wellwash 4 Mk 2. Wash your hands thoroughly after handling test plates. Observe normal laboratory procedures for handling potentially dangerous plates. Use proper protective clothing. Use disposable gloves. Ensure that the working area is well ventilated.

Caution: Never spill fluids in or on the equipment. Prevent any liquid from entering the instrument.

Caution: Immediately wipe away spilled liquids from outer surfaces to prevent damage and wipe over with a mild detergent.

Caution: Keep the instrument free of dust and other foreign matter. Clean the plate carrier and the plate carrier slideway and keep them dry to prevent jamming.

6.3 Priming procedure

Position the plate carrier on its slideway with the priming reservoir to the rear under the wash head (see Fig. 5.13). Press the PRIME button. The wash head will lift and the pinch valve will open for one second allowing wash fluid to flow into the priming reservoir. The wash head will then lower itself to empty the priming reservoir. The priming function is complete when the PRIME indicator turns OFF.

If no further key entry is made within ten seconds of priming, the pump will automatically switch OFF. The instrument will then enter the idle state, waiting for instructions from the keypad and program card.

If the pump fails to start or if the bottle caps are loose, an audible warning will be heard and the VAC FAIL indicator will illuminate. This condition will clear once the pump has started. If the VAC FAIL indicator does not clear after the pump has started, the RESET key must be depressed. Check also that the waste bottle is not full.

Note: The priming procedure must be repeated whenever the POWER switch has been operated or if there has been an interruption of the power supply.

6.4 Adding wash reagent

To add wash reagent, first release the pressure from the wash bottle by carefully opening the bottle cap (see Fig. 6.1). Let the hissing sound end prior to opening the cap all the way.

Fig. 6.1 Releasing the pressure from the wash bottle

Also, when you are changing the used reagent and you wish to rinse and clean the tubing, first release the pressure from the tubing and the wash bottle by slightly opening the wash bottle cap.

Close the wash bottle tightly (Fig. 5.12).

The waste bottle needs to be emptied when the wash bottle is filled.

6.5 Program selection

Choose an appropriate card for the wash routine. Plug the card into the slot located at the base to the right of the washer unit.

Note: Before inserting any program card, ensure that it is clean and dry. Wiping the surfaces with a soft dry cloth will suffice. If any liquid is present on the card, a malfunction of the program may occur.

Note 1: If a run is started without a program card or any row selection, the instrument will signal an error by sounding the audible warning device 3 times.

Note 2: If a run is started with the rows selected but with no program card inserted, the instrument aspirates the rows selected and returns to its idle state with the wash head lowered into the priming reservoir.

Note 3: If a run is started without any rows selected but with a program card fitted, the instrument will aspirate all the rows in accordance with the card configuration, i.e., 8-way or 12-way wash head.

The preprogrammed wash cards will dispense and aspirate the plate row by row for the number of times indicated on the card. There are four cards which can be inserted either side up to perform the wash routine indicated on the side facing up.

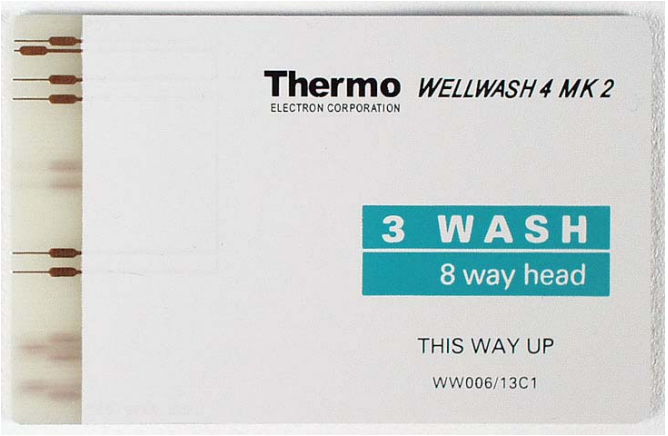

Fig. 6.2 Preprogrammed card: three washes with an 8-way wash head

Contained on the programmable switch card are four (4) rotary type and nine (9) two-way type switches each marked with their function. The setting of these switches controls the function of the washer, enabling a wide variety of protocols to be performed.

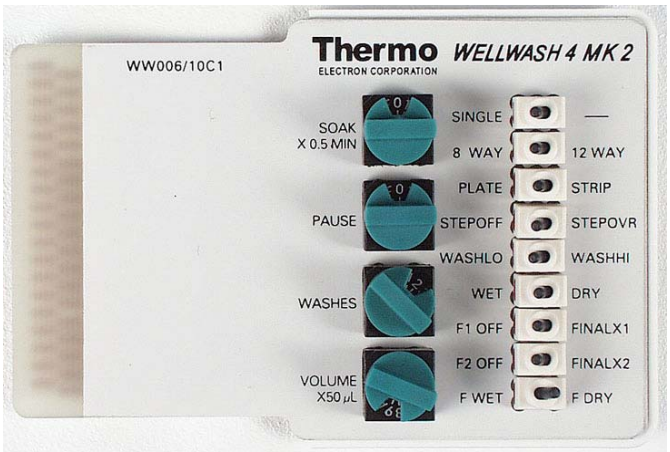

Fig. 6.3 Programmable switch card

6.5.1 Two-way switch functions

Switch settings	
SINGLE Make sure that this switch is always set to single wash head.	—
8 WAY Use with an 8-way wash head.	12 WAY Use with a 12-way wash head.
PLATE All selected rows are washed once, the instrument waits during the PAUSE setting, and the following wash cycle is started.	STRIP Each row is washed the set number of times (WASHES). The PAUSE setting is between each row.
STEPOFF The plate carrier will only pass over the selected rows. With this selection, the plate processing times are kept to a minimum.	STEPOVR The plate carrier will pass over all the rows, not washing the rows not selected. With this selection, the time used for each plate remains constant.
WASHLO The wash head fills the well while rising from the bottom of the well.	WASHHI The wash head fills the well from the raised position.
WET The plate will remain filled after washing. Use this setting with soak period.	DRY The plate will be aspirated after washing.
F WET The plate will remain filled after the final wash.	F DRY The plate will be aspirated after the final wash.

F1 OFF – FINAL X1 and F2 OFF – FINAL X2

Table 6.2 Number of washes after a soak period

Settings		Number of washes
F1 OFF	F2 OFF	0
FINAL X1	F2 OFF	1
F1 OFF	FINAL X2	2
FINAL X1	FINAL X2	3

PLATE – STRIP and WET – DRY

Table 6.3 Aspiration after the final wash

Settings		
PLATE	WET	No aspiration (wells filled)
PLATE	DRY	All rows aspirated after the final wash
STRIP	WET	No aspiration (wells filled)
STRIP	DRY	Each row aspirated after its final wash

6.5.2 Rotary switch functions

SOAK

Set the soak period (Table 6.4), which commences after all the presoak wash routines (WASHES) are complete. Make sure you have selected WET.

Table 6.4 Soak period (in minutes)

Setting	0	1	2	3	4	5	6	7
Soak time (minutes)	0	0.5	1.0	1.5	2.0	2.5	3.0	3.5

Setting	8	9	A	B	C	D	E	F
Soak time (minutes)	4.0	4.5	5.0	6.0	7.0	8.0	9.0	10.0

PAUSE

Set the pause between each wash cycle (Table 6.5). During the strip wash mode, the pause is between each row. During the plate wash mode, the pause is between each pass over the plate.

Note: The times currently available are subject to approval and may be altered to suit individual customer requirements.

Table 6.5 Pause (in seconds) between each washing cycle

Setting	0	1	2	3	4	5	6	7
Strip wash mode (seconds)	0	1	2	3	4	5	6	7
Plate wash mode (seconds)	0	5	10	15	20	25	30	40

Setting	8	9	A	B	C	D	E	F
Strip wash mode (seconds)	8	9	10	15	20	30	45	60
Plate wash mode (seconds)	50	60	75	85	105	120	180	240

WASHES

Set the number of washes to be performed before a soak period (Table 6.6).

Table 6.6 Number of washes before soaking

Setting	0	1	2	3	4	5	6	7
Number of washes	0*)	1	2	3	4	5	6	7

Setting	8	9	A	B	C	D	E	F
Number of washes	8	9	10	11	12	13	14	15

*) No wash, only aspirate

VOLUME

Set the volume dispensed during washing (Table 6.7).

Table 6.7 Washing volume (in µl)

Setting	0	1	2	3	4	5	6	7
Washing volume (µl)	0	50	100	150	200	250	300	350

Setting	8	9	A	B	C	D	E	F
Washing volume (µl)	400	450	500	550	600	650	700	750

Note: The dispense volume is less than the wash volume to avoid overfilling the wells.

6.6 Resetting

If you press the RESET button on the keypad at any stage, this will stop the immediate washing sequence and reset the system to its pre-programmed state.

6.7 Shutdown procedure

Warning: Remove any microplate still on the plate carrier. Dispose of all microplates and strips as biohazardous waste.

The wash reagents may contain buffer salts, which can crystallize when the washer is not in use. This may cause clogging of the wash/aspirate tips. To avoid this, the following procedures should be followed.

6.7.1 Daily shutdown procedure

When the last wash cycle of the day is complete, switch the power OFF through the switch at the rear of the pump unit. Fill the priming reservoir of the plate carrier with distilled water and lower the wash head tips into the priming reservoir. Do not detach the tubes unless you first open the wash bottle cap slightly to release the pressure.

Wipe the instrument surfaces with a soft cloth or tissue paper moistened with deionized distilled aqua, a mild detergent (SDS, sodium dodecyl sulfate) or soap solution.

If you have spilt infectious agents on the instrument, disinfect with 70% alcohol or other disinfectant. See the Wellwash 4 Mk 2 User Manual, Section 7.3.

Last of all, put the dust cover on.

6.7.2 Long-period shutdown

If the washer is not likely to be used for a long period, you should flush the system through with distilled water prior to carrying out the DAILY shutdown procedure. Empty and clean the waste bottle and check that the liquid trap is dry.

When the washer is to be used after a prolonged shutdown, you should prime the system (Section 6.3) at least four (4) times prior to carrying out any wash function.

6.8 Emergency situations

In case there is any abnormal situation during operation, such as fluids spilling inside the instrument, follow these steps:

1. Switch OFF the instrument.
2. Unplug the instrument from the mains.
3. Perform appropriate corrective actions. However, do not touch the interior of the instrument.
4. Contact authorized technical service or your local Thermo Fisher Scientific representative.

7 Maintenance

7.1 Regular and preventive maintenance

7.1.1 Service contracts

It is strongly recommended that this instrument be regularly maintained and serviced every twelve (12) months on a contract basis by trained service engineers of the manufacturer. This will ensure that the product is properly maintained and that it gives trouble-free service. For more details, contact Thermo Fisher Scientific's service department.

7.1.2 Maintenance check list

The check list below contains a recommended maintenance schedule .

Table 7.1 Maintenance check list

Item	As required	Daily	Weekly	Monthly	Yearly
Wipe the case of the instrument.		●			
Cover the instrument with the dust cover after use.		●			
Clean the instrument and the keyboard with a cloth dampened with mild detergent, followed by deionized distilled aqua. See Sections 7.1.3 and 7.1.4			●		
Check the condition of the tubing and the wash and waste bottles. See Sections 7.1.5 and 7.1.6		●			
Check the pinch valve. See Section 7.1.8.		●			
Unclog the wash head tips. See Section 7.1.9.	●				
Change the fuses when blown. See Section 7.1.10.	●				
Decontaminate the instrument if any biohazardous material has been spilled on it or when shipping it to service. See Section 7.3.	●				
Perform the operational check regularly. See Section 5.4.				●	
Arrange for the yearly servicing of the instrument (Section 7.1.1 above).					●

7.1.3 General

Routine and service procedures must be performed by the user to prevent unnecessary wear or hazards and are described below at the frequency with which they should be applied.

For reliable daily operation, keep the instrument free of dust and spills from liquids. It is also advisable to cover the instrument with the dust cover supplied when not in use. In the event of any damage, contact your local Thermo Fisher Scientific representative for service.

Abrasive cleaning agents are not recommended, because they are likely to damage the paint finish.

It is recommended that you clean the case of the instrument periodically to maintain its good appearance. A soft cloth dampened in a warm, mild detergent solution will be sufficient.

Caution: Painted surfaces can be cleaned with most laboratory detergents. Dilute the cleaning agent as recommended by the manufacturer. DO NOT expose painted surfaces to concentrated acids or alcohols for prolonged periods of time as damage may occur.

Clean the keypad with a mild laboratory detergent.

Plastic covers and surfaces can be cleaned with a mild laboratory detergent or alcohol.

Warning: If any surfaces have been contaminated with biohazardous material, a mild sterilizing solution should be used. See Section 7.3.

Warning: If, for any reason, you need to move the instrument, release first the pressure from the tubing by slightly opening the bottle cap. Let the hissing sound end and then detach the yellow and blue coded tubes from the instrument.

7.1.4 Immediate

Although the Wellwash 4 Mk 2 is constructed from high-quality materials, you must immediately wipe away spilled saline solutions, solvents, acids or alkaline solutions from outer surfaces to prevent damage and wipe with deionized distilled aqua.

Spillages of liquid on the carrier slideway should be wiped off promptly, as this may cause the plate carrier to drag during operation.

Caution: DO NOT use any solutions containing hypochlorite, such as bleach, on any of the stainless steel surfaces, as this may cause permanent damage to the finish.

7.1.5 Tubing

Inspect the condition of the tubing regularly. When you notice that a tube is becoming harder and it is no longer clear, it should be replaced. Only use tubing supplied by Thermo Fisher Scientific Oy. The instrument is supplied with spare tubes (Fig. 5.2). See Chapter 10 Ordering Information.

Warning: Never detach a tube without first releasing the pressure by slightly opening the bottle cap. Let the hissing sound end prior to detaching any of the tubes.

7.1.6 Reagent / waste bottles

Due to the nature of the materials used for the manufacture of our reservoir bottles, our suppliers have recommended that they be replaced after two years of use. This replacement policy must be more frequent if the bottles are stored or used in direct sunlight for long periods of time.

Thermo Fisher Scientific Oy is aware of a potential risk of leakage in the pressure bottles when they have been subjected to long periods of UV radiation. Although this occurrence is very rare, our customers are urged to follow this piece of advice.

Bottles are available from Thermo Fisher Scientific Oy for the Wellwash 4 Mk 2 (Cat. no. WW934/1). Spare O rings for the bottle plugs are included in the spare parts bag delivered with the instrument (see Fig. 5.1, item 6). See Chapter 10 Ordering Information.

Ensure that the waste bottle is emptied regularly and at least every time the wash bottle is filled. Do not let the liquid level exceed the level mark on the bottle.

The waste bottle is fitted with a liquid level sensor. The sensor prevents the use of the instrument after the waste bottle is filled to the mark.

7.1.7 Liquid trap bottle

The liquid trap bottle prevents liquid from entering the pump and **it should be kept dry at all times**. Liquid should enter the liquid trap bottle only if the liquid level sensor is not properly connected (Fig. 7.1, item 1) and the waste bottle overflows. If that happens, follow immediately the steps below:

1. Switch OFF the instrument and make sure there is no pressure in the wash bottle by opening the wash bottle cap slightly.
2. Open the black screw on the cap of the liquid trap bottle cover (Fig. 7.1, item 2).

1. Liquid level sensor
2. Liquid trap bottle cover screw

Fig. 7.1 Liquid level sensor and liquid trap bottle cover

3. Release the cover by slightly lifting the tube and slide the cover then upwards along the tube (Fig. 7.2)

Fig. 7.2 Opening the liquid trap bottle cover

4. Pull the thick vacuum tube (with the 90° angle) out of the liquid trap bottle.

Fig. 7.3 Pulling the thick tube out of the liquid trap bottle

5. Pull the thin tube out of the liquid trap bottle.

Fig. 7.4 Pulling the thin tube out of the liquid trap bottle

6. Let the red-coded tube remain connected to the bottle cap and take the bottle out, unscrew the liquid trap bottle cap and empty the bottle.

Fig. 7.5 Opening the liquid trap bottle

7. Close the bottle. Make sure the end of the red-coded tube is about 2 cm deeper inside the bottle than the thin tube will be. Put the bottle back to its place, but don't push it yet all the way down.
8. Insert the thin tube back through the liquid trap bottle cap so that the mark on the tube (Fig. 7.4, item 1) is at the level of the cap.
9. Push the bottle all the way down. Push the thick vacuum tube as far as it goes. Its end should now be approximately at the same level as the red-coded tube's end.
10. Slide the cover back down and screw the black screw back on. You can pull the red-coded tube slightly out to make sure the cover is tightly on.

7.1.8 Pinch valve

Occasionally the tube passing through the pinch valve becomes permanently closed, i.e., it will not return to its normal shape when the valve opens while in use. This tends to occur after extended periods of non-operation.

Release the pressure in the tubing by opening the wash bottle cap slightly. To unpinch, locate the valve under the wash arm assembly. Press the black top of the valve to release the tube, and pull the tube gently through the pinch valve a few millimeters; the valve will now pinch into a new position. See Fig. 7.6.

Warning: Never press the black top of the pinch valve without first releasing the pressure by slightly opening the wash bottle cap. Let the hissing sound end prior to pushing the valve top.

Fig. 7.6 Unpinching the tube

If the washer is run now, the liquid will flow normally.

It may be necessary to replace the tube after extended periods of use due to fatigue. Use the spare tubes supplied with the instrument (Fig. 5.2, item 3).

1. Switch OFF the instrument and make sure there is no pressure in the wash bottle by opening the wash bottle cap slightly.
2. Press the black top of the valve to release the tube and slide the tube gently out of the pinch valve through the slit on the side.
3. Disconnect the tube from both ends and replace with a new one.
4. Press the black top of the valve and slide the new tube back into the valve through the slit. Make sure the tube is properly in place through the valve and is not pinched especially on the rear side of the valve.

7.1.9 Unclogging tips

The dispense/aspirate tips of the wash head may become clogged with salt deposits. To clear them, switch OFF the washer, lift up the wash arm assembly and unclog the tips using the small de-clogging tool provided (see Fig. 7.7). Push the de-clogging tool into the thin metal tube.

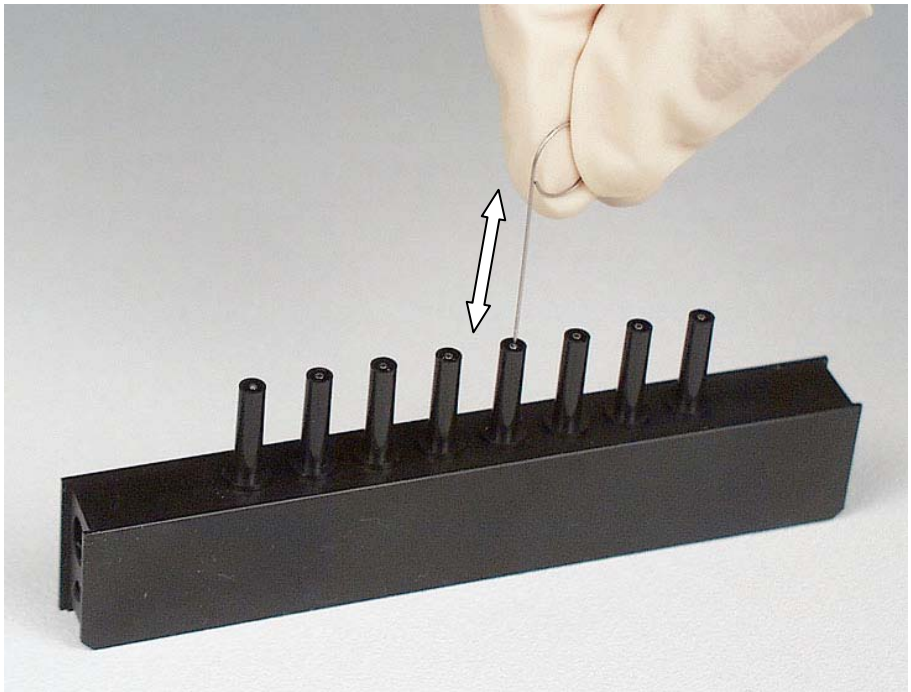

Fig. 7.7 De-clogging the wash head

7.1.10 Fuse replacement

1. Switch OFF the washer and disconnect the mains supply cable.
2. Slide the washer and pump units open, and disconnect the pressure and vacuum tubing from the washer unit.

Warning: Never disconnect the pressure tubing without first releasing the pressure by slightly opening the wash bottle cap. Let the hissing sound end prior to disconnecting the tubing.

3. Locate the fuse holders at the rear of the washer and pump units.
4. On the washer unit, use a screwdriver to remove the fuse holder cap. Turn the screwdriver counterclockwise about 45° to release it and then pull it out (Fig. 7.8).

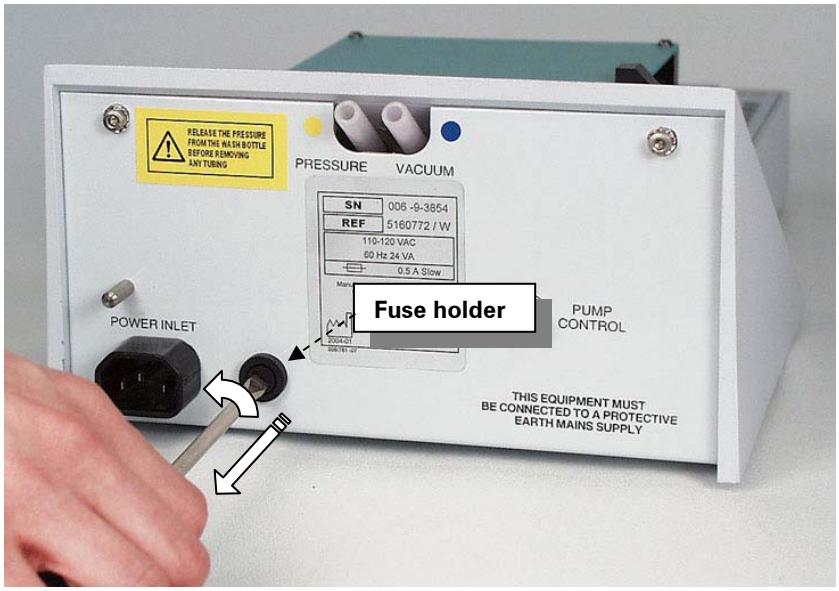

Fig. 7.8 Opening the fuse holder of the washer unit

5. Remove the faulty fuse and discard it.

Fig. 7.9 Washer unit fuse and fuse holder

6. Ensure that the replacement has the same rating as appears on the rating label on the rear panel of the washer unit. Only use fuses specified by Thermo Fisher Scientific Oy.
7. Insert the new fuse to the fuse holder and push the holder into its place. Turn the holder clockwise about 45° with the screwdriver.
8. On the pump unit, use the screwdriver to gently pry the fuse folder open.

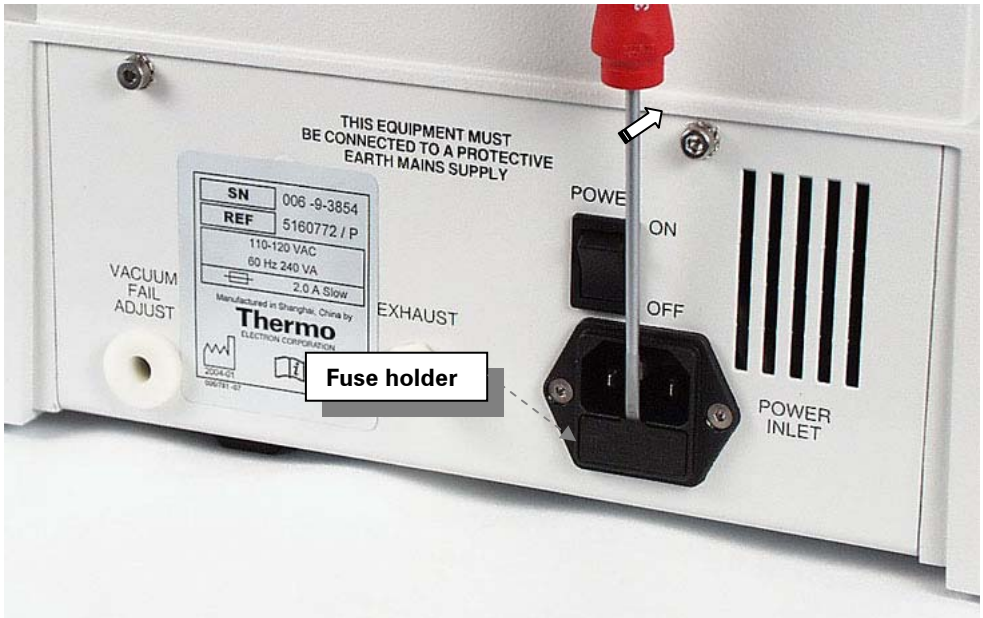

Fig. 7.10 Opening the fuse holder of the pump unit

9. There are two fuses inside the holder. The outer one is a spare fuse and the inner one is the one in use.

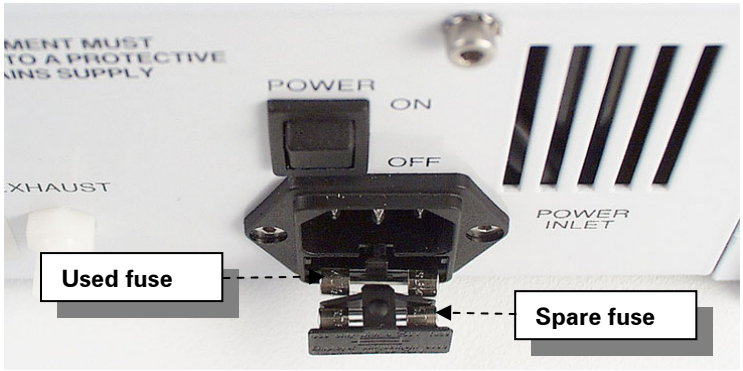

Fig. 7.11 Pump unit fuse holder opened

10. Remove the inner fuse and discard it.
11. Ensure that the replacement fuse have the same rating as appears on the rating label on the rear panel of the pump unit.
12. Insert the new fuse (the spare fuse) to the inner slot of the fuse holder and push the holder into its place.
13. Reconnect the tubing and the washer and pump units. Reconnect the instrument to the mains supply.

If the fuses blow again, contact authorized service. See Section 8.2.

Note: Ensure that only fuses with the required rated current and of the specified type are used for replacement. The use of makeshift fuses and the short-circuiting of fuse holders are prohibited.

7.2 Disposal of materials

When disposing of used material, follow the Good Laboratory Practices. Refer to local regulations for the disposal of infectious material.

Warning: The samples can be potentially infectious. Dispose of all used microplates, microstrips, disposable gloves, syringes, disposable tips, etc., as biohazardous waste.

7.3 Decontamination procedure

Decontamination should be performed in accordance with normal laboratory procedures. Any decontamination instructions provided with the reagents used should be followed.

A decontamination procedure is only recommendable when infectious substances have been in direct contact with any part(s) of the instrument.

If there is any risk of contamination with biohazardous material, the procedure recommended below or some other corresponding decontamination procedure must be performed.

It is strongly recommended that the complete decontamination procedure be performed before relocating the instrument from one laboratory to another. See Section 7.4 How to pack for service.

Decontamination is not required for the proper functioning of the instrument.

Example of decontaminants

- Ethanol 70%
- Virkon solution 1 – 3%
- Glutaraldehyde solution 4%
- Chloramine T
- Microcide SQ™ 1:64

Caution: If local or laboratory regulations prescribe regular decontamination, it is not advisable to use formaldehyde, since even small traces of formaldehyde affect the enzyme being used in EIA tests in a negative way resulting in bad test results.

Caution: Do not use sodium hypochlorite as a decontaminant. The wash head will be damaged by it.

Warning: Always use disposable gloves and protective clothing and operate in a well-ventilated area.

7.3.1 How to decontaminate the instrument

1. Prepare the decontaminant: e.g., 200 ml 10% formaldehyde solution, 1 – 3% Virkon solution or 200 ml 4% glutaraldehyde solution (or another agent recommended by your safety officer).

2. Prime the unit with distilled water from the wash bottle.
3. Lift the wash head and fill the prime tray with glutaraldehyde solution.
4. Aspirate the prime tray using the wash head, and then reprime the prime tray with distilled water.
5. Remove the plate carrier and the wash head and place into a glutaraldehyde solution for 24 hours.
6. Empty the fluid containers.
7. Switch OFF the power and disconnect the mains supply cable.
8. Decontaminate the outside of the unit using a wad of cotton wool soaked in 70% alcohol.
9. Place the entire instrument into a large plastic bag. Ensure that the reagent containers are disconnected and open.
10. Place a wad of cotton wool soaked in 10% formaldehyde solution into the bag. Ensure that the wad does not make contact with the instrument.
11. Close the bag firmly and leave the instrument in the bag for at least 24 hours.
12. Remove the instrument from the bag.
13. Clean the instrument using a mild detergent.
14. Remove any stains using 70% alcohol.
15. Take the plate carrier and the wash head out of the glutaraldehyde solution and rinse with distilled water. Reposition them on the unit.
16. Flush the fluid path of the instrument with deionized distilled aqua using the priming procedure.
17. The wash heads can be sterilized in 70% ethanol.
18. Also, wash and decontaminate the wash, rinse and waste bottles.

7.4 How to pack for service

When you ship the instrument for service, remember to:

- Inform about the use of hazardous materials.
- Decontaminate the instrument beforehand.
- Screw the transit screws into the bottom of the instrument to the correct shipment location.
- Pack the instrument according to the enclosed packing instructions (Section 7.4.1).
- Use the original packaging to ensure that no damage will occur to the instrument during shipping. Any damage will incur additional labor charges.
- Enclose a dated and signed Certificate of Decontamination (Appendix B) both inside and attached to the outside of the package, in which you return your instrument (or other items).
- Enclose the return authorization number (RGA) given by your Thermo Fisher Scientific representative.
- Indicate the fault after you have been in touch with your local Thermo Fisher Scientific representative or Thermo Fisher Scientific's service department.

See Section 9.1 for details on storage and transportation temperatures. See also Section 8.2 Service request protocol.

7.4.1 Packing

The Wellwash 4 Mk 2 comprises two units that are packed in a single box. For packing the washer and pump units, follow the procedure below:

1. Place the box on the floor and open the top. Put the bottom part of the package shock absorber at the bottom of the box.
2. Wrap the washer and pump units into plastic. Drop them into their own places onto the bottom part of the package shock absorber.
3. Put the top part of the package shock absorber into the box. Ensure correct positioning and the correct location for the manifold support piece.
4. Put the bottles into Minigrip plastic bags and drop them into their own locations in two corners of the box.
5. Put the two small carton boxes onto the top part of the package shock absorber. DO NOT place the small boxes on top of each other, but place them instead into their own specific locations.
6. Put the rest of the items (user manual, labels, notice, packing list, etc.) into a Minigrip plastic bag and place it into its own position on the top part of the package shock absorber.
7. Close and seal the box.

7.5 Disposal of the instrument

Warning: Decontaminate the instrument prior to disposal. See Section 7.3 and Appendix B on decontamination. Also, wash and decontaminate the bottles prior to disposal.

Dispose of the instrument according to the legislation stipulated by the local authorities concerning take-back of electronic equipment and waste. The proposals for the procedures vary by country.

Thermo Fisher Scientific has contracted with one or more recycling/disposal companies in each EU Member State European Country, and this product should be disposed of or recycled through them. Further information on Thermo Fisher Scientific's compliance with these Directives, the recyclers in your country, and information on Thermo Fisher Scientific products which may assist the detection of substances subject to the RoHS Directive are available at www.thermo.com/WEEERoHS.

Regarding the original packaging and packing materials, use the recycling operators known to you.

For further information, contact your local Thermo Fisher Scientific representative.

8 Troubleshooting

Warning: DO NOT use the instrument if it appears that it does not function properly.

8.1 Troubleshooting guide

The problems covered below in Table 8.1 are considered as faults that require repair or corrective repair. If the installation procedure is carefully followed, no faults should arise. However, if problems occur or reoccur, contact authorized technical service immediately.

Table 8.1 Troubleshooting list

	Error	Cause	Action
1	No POWER ON indicator	Mains lead not connected	Connect the lead to an appropriate supply.
		Fuse blown	Replace the fuse.
		The pump unit POWER switch is OFF	Switch the POWER switch ON.
2	VAC FAIL illuminated	Wash bottle is full	Empty the waste bottle.
		Air leaks	Check the bottle caps for leaks and tighten as required.
		Constricted tubing	Check the tubing for kinks.
		Pump failure	Check that the pump unit is switched ON.
			Check that the pump unit is correctly connected to the washer unit.
			Check the pump unit fuse and replace it, if required.
3	Carrier does not move when START is pressed, audible warning sounds 3 times	Program card not inserted	Insert the program card (6.5).
		No row is selected	Select the row number of the last row to be washed.
4	No delivery of wash reagent into wells	Silicon tube in pinch valve constantly pinched	Push the pinch valve and pull the tubing through the valve and reform (7.1.5).
		Air leaks at the wash bottle cap	Tighten cap; replace gasket if necessary.
		Tubing leaks	Check the tubing and tube connectors.
5	Too small dispensing of wash reagent into wells	Constricted or clogged tubing	Check the tubing and tube connectors for kinks and obstacles.
6	Unequal dispensing or aspirating of wash reagent	Microplate incorrectly positioned on the plate carrier	Check and adjust the position of the plate carrier.
		Strips incorrectly installed in the holder	Check that the strips are correct and adjust as necessary.
		One or more dispense tips clogged	De-clog the washer tip(s) (7.1.9).
7	Overfilling of wells during washing	Wash head height requires adjustment	By using the spanners supplied, adjust the wash head height by loosening the locknut, lowering the domed nut and locking into position on the head lift rod (5.3.2).
		Air leaks at the waste bottle cap	Tighten cap; replace gasket if necessary.
8	Leakage between wash cycles	Pinch valve not functioning properly	Push the pinch valve and pull the tubing through the valve and reform (7.1.5).

9	Wash arm assembly not moving as it should		Contact authorized service.
10	Plate carrier not moving as it should	Obstacle on the plate carrier slideway	Keep the slideway clean.
11	Wash cycle does not correspond to the program card	Program card not inserted all the way Program card is dirty Program card is damaged	Push the program card all the way into the slot. Clean the program card. Replace the program card. Contact your local Thermo Fisher Scientific representative.
12	Instrument not functioning as it should		Press the RESET button. If that doesn't help, switch the instrument OFF and ON again. If the problem persists, contact authorized service. DO NOT use the instrument if it appears that it does not function properly.

If you were able to correct the error without having to turn off the instrument, you may continue instrument operation by pressing **start**.

8.2 Service request protocol

If the Wellwash 4 Mk 2 requires service, contact your local Thermo Fisher Scientific representative or Thermo Fisher Scientific's service department. DO NOT under any circumstances send the instrument for service without any prior contact. It is imperative to indicate the fault and nature of the required service. This will ensure a faster return of the instrument to the customer.

Your Thermo Fisher Scientific representative or distributor will take care of sending a complaint form (Complaint-order) to Thermo Fisher Scientific's service department. The Complaint-order contains a more detailed description of the fault, symptom or condition. Give all the necessary information to the distributor, who will fill in and forward the Complaint-order to Thermo Fisher Scientific's service department.

Check Section 7.4 How to pack for service. You will find instructions on how to proceed before shipping the instrument for service.

Check that any necessary decontamination procedure has been carried out before packing. See Section 7.3 Decontamination procedure. Ensure that the Certificate of Decontamination (see Appendix B) as well as the return authorization number (RGA) are sent with the instrument.

Thermo Fisher Scientific's service department will keep you up to date with the progress of service and provide you with any further details you might need, e.g., on maintenance, serviceability, troubleshooting and replacement.

8.3 Limitations, warnings and cautions

This instrument is designed to provide full user protection. When correctly installed, operated and maintained, it will present no hazard to the user.

The following recommendations are given for added user safety.

8.3.1 Liquid reservoir – IMPORTANT

Due to the nature of the materials used for the manufacture of our reservoir bottles, our suppliers have recommended that they are replaced after two years of use. This replacement policy must be more frequent if the bottles are stored or used in direct sunlight for long periods of time.

Thermo Fisher Scientific Oy is aware of a potential leak in the pressure bottles when they have been subjected to long periods of UV radiation. Although this occurrence is very rare, our customers are urged to follow this piece of advice.

Bottles are available from Thermo Fisher Scientific Oy for the Wellwash 4 Mk 2 (Cat. no. WW934/1). See Chapter 10 Ordering Information.

8.3.2 Electrical

Ensure that the mains supply cable supplied with the unit is always used. **If a correct type of mains cable is not provided, use only cables certified by the local authorities.**

The mains plug should only be inserted into a socket outlet provided with a protective ground contact. The protective action must not be negated by use of an extension cable without a protective ground wire.

Warning: DO NOT replace fuses without first disconnecting the mains supply cable. Only use fuses specified by Thermo Fisher Scientific Oy.

Ensure that only fuses with the required rated current and of the specified type are used for replacement. The use of makeshift fuses and the short-circuiting of fuse holders are prohibited.

Warning: When the instrument is connected to the mains supply, the opening of covers or the removal of components is likely to expose live parts. Before the instrument is opened for any adjustment, replacement, maintenance or repair, disconnect it from all voltage sources by disconnecting the mains supply cable.

Any adjustment, maintenance or repair of the opened instrument under voltage should be avoided, if possible, but, if unavoidable, should be carried out only by a skilled technician aware of the hazard.

The same precautions applicable when using any electrical equipment should naturally be observed with this instrument. DO NOT touch switches or electrical outlets with wet hands. Switch the instrument OFF before disconnecting it from the mains supply.

8.3.3 Mechanical and environmental

Mechanical

The wash head is a free-moving mechanical device controlled by the instrument and not directly by the operator. It is designed for "hands-off" operation and should be used as such. Never reach into the workspace while the instrument is performing a wash cycle. If it is necessary to stop the operation of the equipment, press the RESET button on the keypad.

Never open the wash bottle, detach any of the tubing or press the black top of the pinch valve without first releasing the pressure by slightly opening the bottle cap. Let the hissing sound end prior to proceeding.

Environmental

Infectious clinical samples and corrosive fluids are commonly used with this equipment. The "hands-off" nature of the system allows the user to wash the reaction wells without getting into direct contact with these fluids. However, wells that have been in contact with potentially hazardous fluids must be handled before and after the wash process, and this should be done with utmost care. Hand and eye protections should always be worn as well as corrosive resistant laboratory coats.

If you are using a washing reagent that is either volatile or easily splashing, or when you are washing microplates with samples of human or animal origin, keep yourself at a safe distance from the instrument while it is operating to avoid exposure. Place the instrument into a fume hood.

When spills get into contact with the carrier slideway, it should be decontaminated with a hard surface disinfectant (see Section 7.3).

Observe Good Laboratory Practices (GLP) when handling potentially hazardous samples.

8.4 Defects and abnormal stresses

Whenever it is likely that the protection has been impaired, the instrument should be made inoperative and be secured against any unintended operation.

The protection is likely to be impaired if, for example, the instrument:

1. Shows any visible damage
2. Fails to perform the intended functions
3. Has been subjected to prolonged storage under unfavorable conditions
4. Has been subjected to severe transport stresses

8.5 Before operation

Read this manual in its entirety, as it contains information necessary to ensure safe operation.

8.5.1 Installation

The instrument should be unpacked and installed in accordance with Chapter 5. Particular attention should be paid to the correct fitting of the tubing to obviate leaks (Fig. 5.11). Always ensure that the electrical supply in the laboratory conforms to that specified on the voltage label on the rear panel of the pump unit.

8.5.2 In operation

Ensure that the waste bottle is emptied regularly and at least every time that a wash bottle is loaded. The liquid trap bottle that prevents liquid from entering the pump should be kept dry at all times.

8.6 Cleanliness

Clean the instrument regularly as stated below.

1. It is recommended that the case of the instrument is cleaned periodically to maintain its good appearance. It is particularly essential that the carrier slideway be clean and dry to prevent jamming. A soft cloth dampened in warm, mild detergent solution will suffice.

2. If any surfaces have been contaminated with biohazardous material, a mild sterilizing solution should be used. See Section 7.3 Decontamination procedure.

Caution: DO NOT use any solutions containing hypochlorite, such as bleach, on any of the stainless steel surfaces, as this may cause permanent damage to the finish.

9 Technical Specifications

9.1 General specifications

General specifications			
Overall dimensions	**Washer unit** 41 cm x 22 cm x 12 cm [16.1" x 8.7" x 4.7"]	**Pump unit** 30 cm x 18 cm x 16 cm [11.8" x 7.1" x 6.3"]	
Weight	**Washer unit** 4.5 kg [10 lbs.]	**Pump unit** 5.5 kg [12 lbs.]	**Total** 10 kg [22 lbs.]
Mains power supply	220 – 240 Vac, 50 Hz 110 – 120 Vac, 60 Hz 100 Vac, 50/60 Hz		
Power consumption	300 VA		
Heat dissipation	1024 BTU		
Operating cycle	Continuous		
Fuse requirements	**220/240 Vac 50 Hz**	**100/110/120 Vac**	
Washer unit:	2 x 0.5 A/250 V UL 198G Time Delay	2 x 0.5 A/250 V UL 198G Time Delay	
Pump unit:	2 x 1.0 A/250 V UL 198G Time Delay	2 x 2.0 A/250 V UL 198G Time Delay	
Operating conditions	**Indoor use**		
Temperature	Operating range	+5°C to +40°C	
	Full specification range	+15°C to +25°C	
	Storage temperature range	–10°C to +70°C, packed in transport packaging	
	Transport temperature range	–40°C to +70°C, packed in transport packaging	
Relative humidity	90% max. non-condensing		
Pressure	Max. pressure on vessel	7 psi (0.5 bar) (self-limiting)	
Plate type	96-well plate		
Containers	Material: HDPE (high density polyethylene)		
	Wash bottle capacity	2 liters	
	Waste bottle capacity	2 liters	
	Additional wash bottle capacity	2 liters	
Fluid consumption	Wash fluid consumption	approx. 150 ml/complete microplate	
	Priming consumption	approx. 15 – 20 ml	
Residual aspiration volume	< 5 µl per well, using 0.02% Tween solution		
Dispensing precision	5%, using 0.02% Tween solution		
Wash heads	8-way and 12-way Material: POM (polyoxymethylene, polyacetals)		
Wash program cards	1 – 4 washes		
Programmable card	Volume	0 – 750 µl	
	Washes	1 – 15	
	Soak time	0 – 10 minutes	
	Pause	0 – 4 minutes	
Wash time	120 s, 3 x 350 µl with 12-way wash head 165 s, 3 x 350 µl with 8-way wash head		

9.2 Safety specifications

Safety performance:
EN 61010-1:1993 + A2:1995/IEC 61010-1:1990 + A1:1992 + A2:1995, including CENELEC Common Modifications, US and CA National differences
EN 61010-1:2001 (Ed. 2)

9.3 In conformity with the requirements

Wellwash 4 Mk 2 bears the following markings:
Type 006
100 – 120 Vac, 200 – 240 Vac 50/60 Hz, 300 VA
CE mark

Wellwash 4 Mk 2 conforms to the following requirements:
2006/95/EC (Low Voltage Directive)
2004/108/EC (Electromagnetic Compatibility Directive, EMC)
FCC Part 15, Subpart B/Class B
2002/96/EC (Waste of Electrical and Electronic Equipment)

EMC performance:	
EN 50081-1:1992	Generic emission standard. Residential, commercial and light industry.
EN 50082-1:1997	Generic immunity standard. Residential, commercial and light industry.
EN 61326-1:1997 + A1:1998	Product family standard.

10 Ordering Information

Contact your local Thermo Fisher Scientific representative for ordering and service information.

Code	Instrument
5160770	Wellwash 4 Mk 2 220 – 240 V AC/50 Hz
5160772	Wellwash 4 Mk 2 110 – 120 V AC/60 Hz

10.1 List of accessories

Code	Product
N03283	2 l wash bottle
1514313	2 l waste bottle
WW004/1	12-way wash head
WW004/11	8-way wash head
WW004/48	Wash height adapter

10.2 List of recommended spare parts

Code	Product
006/612; 006/613; 006/613J	Spare parts bag for 220 V; (see Fig. 5.1) Spare parts bag for 110 V; Spare parts bag for 100 V
004/023D	Spare tubes bag (see Fig. 5.2)
1210840; 1210890; 1210920	Spare fuses 0.5 A; Spare fuses 1 A (for 220 V); Spare fuses 2 A (for 100 V and 110 V)

11 Warranty Certificate

Thermo Fisher Scientific Microplate Instrumentation Business's Wellwash 4Mk2 is fully guaranteed against defective parts and materials including defects caused by poor workmanship for a period of twelve (12) months from the date of delivery.

Thermo Fisher Scientific will repair or replace defective parts or materials during the term of warranty at no extra charge for materials and labor provided that the products were used and maintained in accordance with Thermo Fisher Scientific's instructions. Warranty is invalid if products have been misused or abused.

For this warranty to be effective, the product must have been purchased either directly from Thermo Fisher Scientific or from an authorized Thermo Fisher Scientific distributor. The guarantee is not transferable to a third party without prior written approval from Thermo Fisher Scientific.

This guarantee is subject to the following exclusions:

- Any defects caused by normal wear and tear.
- Defects caused by fire, lightning, flood, earthquake, explosion, sabotage, war, riot or any other occurrence of the character listed above.
- Refurbished products, which are subject to different warranty conditions.

THIS WARRANTY IS IN LIEU OF ALL OTHER EXPRESSED OR IMPLIED WARRANTIES, INCLUDING BUT NOT LIMITED TO ANY IMPLIED WARRANTIES OF MERCHANTABILITY OR FITNESS FOR A PARTICULAR PURPOSE. The seller is not liable for any loss or damage arising out of or in connection with the use of the product or other indirect damages.

Full warranty terms and conditions can be obtained from your local Thermo Fisher Scientific dealer.

This document acts as warranty certificate.

11.1 Warranty limitations

Consumables are not included in the warranty.

12 Index

A

Accessories 56
  inspecting 14
  unpacking 12
Accessory pack 13
Application 65
Audible warning 30

B

Bottle caps 10
Bottles 10
  emptying 37
  replacement interval 36
Buttons 11

C

Certificate of Decontamination 64
Check list 12
  maintence 35
Clogging 42
  prevention 34
Color coding of the tubes 18
Complaint order 51
Consumables
  warranty limitations 57
Contamination
  specimen 27
Control panel 11
Countdown sequence of row indicators 23

D

Decontamination 45
  Certificate of 64
  procedure 45
Dimensions 54
Directives 55
Disinfectants 45
Disinfection procedure 34
Dispensed volume 33
Dispensing precision 54
Disposal
  instrument 47
  materials 45

E

Environmental conditions 54

F

Feedback Form 65
Frequency selector 10, 16
Fuses 54
  replacing 43

H

Hose connectors 20
How to disinfect the instrument 34

I

Idle state 24, 30
Indicators 11
Installation 12
  check list 12
  site 15
Installing
  liquid level sensor 19
  pump and washer units together 20
Instrument
  decontamination 45
  functional description 10
  inspecting 14
  markings 55
  safety symbols and markings 7
  unpacking 12

K

Keypad 10, 11
  cleaning 36

L

Liquid level sensor 10
  installation 19
Liquid trap 10
Liquid trap bottle 10, 37
  overfilling precautions 19

M

Mains supply cable 23
Mains switch 23
Maintenance 35
  check list 35
Manifold pipes 20
Microplate
  handling 27
  size differences 22

N

Number keys 11
Number of washes 33

O

Operating conditions 15
Operational check 23
Ordering information 56
Overfilling of wells 49

P

Packing 47
  for service 46
  list 13
Pause between washes 33

Pinch valve 10, 19, 28
holder 17
unpinching 41
Plate 9, 34
carrier 34
Plate carrier 10, 26, 28
not moving 49
spillages 36
Plate wash mode 31
Power cable 23
Power indicator 11
Power switch 10, 11
Prime indicator 11
flashing 24, 26
Prime push button 11
Priming 24, 28
Priming reservoir 10
Program card 10, 30
Pump unit 10
installation 18

Q

Quick Reference Guide 63

R

Reagent bottle 10, 37
Reset button 11, 27, 28, 34
Rotary switches 32
Row select buttons 11
Row select indicators 11
countdown sequence 23, 26

S

Safety symbols 7
Selecting
program 30
Service 51
Shutdown 34
daily 34
prolonged 34
Site of operation 15
Soak period 32
Spare parts 56
Specifications
general 54
safety 55
Start button 11
Start-up 26
Switch card 31

T

Tips
unclogging 42
Transport damage 14
Transport locking screws 10, 13, 16
Transport package 12, 14
Troubleshooting 48
Troubleshooting list 49

Tubes
  color codes 18
  unpinching 41
Two-way switches 31

U

Unpacking 12
Using after prolonged shutdown 34

V

Vacuum fail indicator 11
Vacuum Fail indicator 27, 28, 49
Voltage 15
Volume 33

W

Warning signal 30
Warranty 12, 16, 57
Wash arm assembly 10
Wash bottle 10
  installation 21
Wash head
  height 22
  holder 17
  installation 18, 23
  unclogging tips 42
Wash mode
  plate 31
Wash reagent
  bottle 37
  no flow 41, 49
  unequal dispensing or aspirating 49
Washer unit 10
Waste bottle 10, 37
  overfilling precautions 19
Weight 13, 15, 54
Working area 15

13 Glossary and Abbreviations

EIA	Enzyme immunoassay. An immunoassay using a color-changing enzyme-substrate system for indicating results. A diagnostic test method to measure or detect a substance using antibody-antigen reactions.
EN	European Norm.
EU	European Union.
IEC	International Electrotechnical Commission.
Microplate	A rigid or framed polystyrene plate with microwells in different well formats (e.g., 6, 12, 24, 48, 96, 384, 864, etc., wells) for ease of use in performing multiple tests through techniques such as EIA or ELISA.
Priming	Completely filling the pump tubing and syringe with bubble-free fluid to allow sustained, reproducible pumping action. The air in an unprimed line acts as a spring, adversely affecting accuracy and precision.
Reagent	A substance or solution used to produce a characteristic chemical reaction in a sample that allows an analyte to be detected and measured.
RS-232C	EIA approved standard used in serial data transmission, covering voltage and control signals. The data is transferred serially (one digital bit at a time) via one path, but some control signals can be transferred simultaneously via parallel paths.

13.1 Keywords for web pages

EIA
ELISA
enzyme immunoassay
liquid handling
microplate
microplate washing
Microtiter plate
microwell plate
plate
sandwich assay
separation technique(s)
sandwich assay
solid phase assays
Thermo Scientific
Thermo Fisher Scientific
washing

13.2 Literature

Newman, D.J. and C.P. Price (1997) Separation Techniques. In: Principles and Practice of Immunoassay 2nd ed. (eds. Price, C.P. and Newman, D.J.) pp. 154 – 172 (Stockton Press, New York)

Coupe, N.B. and A.M. Cain. Microplate washing – the most important step in the ELISA process. Labsystems-Denley application note.

Beumer T., Stoffelen, E., Smits, J. and Carpay, W. (1992). Microplate washing: process description and improvements. J. Immunol. Methods **154**, 77 – 87.

Parry, J.V., Mortimer, P.P., Friederich, P. and Connell, J.A. (1997). Faulty washers and soiled micropipettors may generate false positive serological results. Clinical and Diagnostic Virology **7**, 173 – 181.

Appendix A: Wellwash 4 Mk 2 Quick Reference Guide

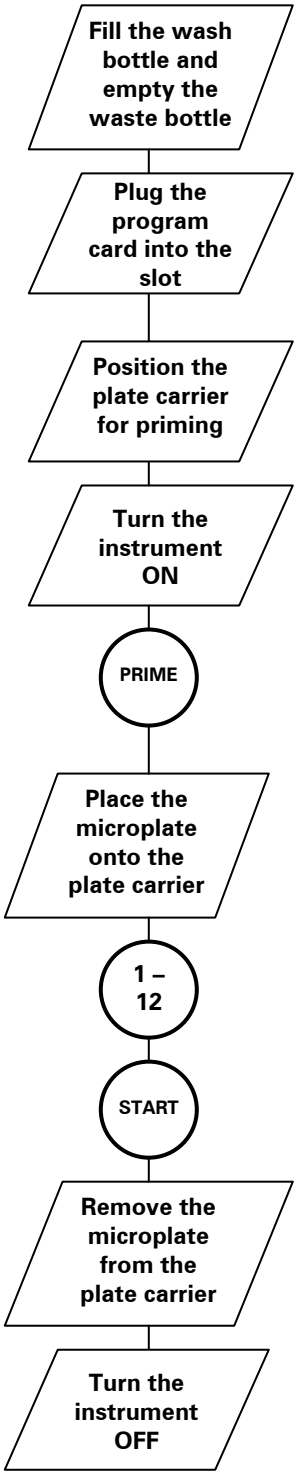

Ensure that the instrument is switched OFF.

Open the wash bottle cap (Fig. 6.1) very carefully to release any residual pressure. Let the hissing sound end prior to opening the cap all the way. Fill the wash bottle with appropriate washing reagent and tighten the bottle cap firmly (Fig. 5.12).

Select either one of the preprogrammed wash cards or the programmable switch card (Section 6.5).

Before inserting any program card, ensure that it is clean and dry. Wiping the surfaces with a soft dry cloth will suffice. If any liquid is present on the card, a malfunction of the program may occur.

Position the plate carrier on its slideway with the priming reservoir to the rear under the wash head (see Fig. 5.13).

The POWER indicator on the keypad (Fig. 4.2) illuminates and a countdown sequence will begin on the row indicator LEDs.

The PRIME indicator flashes until you prime the system.

The priming function is complete when the PRIME indicator turns OFF.

If no further key entry is made within fifteen seconds of priming, then the pump will automatically switch OFF. The instrument will then enter the idle state, waiting for instructions from the keypad and program card.

Check that the correct wash head (8-way or 12-way) is fitted.

Check that the plate is placed properly onto the plate carrier (Fig. 5.16).

Select the row number of the last row to be washed. If no row is selected, the whole plate will be washed.

The instrument performs the wash sequence.

Appendix B: Certificate of Decontamination

The decontamination procedure is required prior to shipping the instrument to Thermo Fisher Scientific Oy, e.g., for repair. If, for any reason, the instrument is shipped back to Thermo Fisher Scientific Oy, it must be accompanied by a dated and signed Certificate of Decontamination, which must be attached to the outside of the package containing the instrument. See Section 7.3 Decontamination procedure.

Failure to confirm decontamination will incur additional labor charges or at worst the items will be returned for proper cleaning.

Before returning any instrument(s) or item(s), ensure that they are fully decontaminated. Confirm A or B status:

Name: _____

Address: _____

Tel./Fax: _____

Name: _____ Serial no.: _____

A)
I confirm that the returned items have not been contaminated by body fluids, toxic, carcinogenic or radioactive materials or any other hazardous materials.

B)
I confirm that the returned items have been decontaminated and can be handled without exposing the personnel to health hazards.

Materials used in the unit: Chemicals + Biological • Radioactive *)

Specific information about contaminants: _____

Decontamination procedure[1]: _____

Date and place: _____

Signature: _____

Name (block capitals): _____

*) The signature of a Radiation Safety Officer is also required when the unit has been used with radioactive materials.

This unit is certified by the undersigned to be free of radioactive contamination.

Date and place: _____

Signature: _____

Name (block capitals): _____

[1] Please include decontaminating solution used.

Please send to Thermo Fisher Scientific Oy
Fax: +358-9-32910415

Appendix C: Wellwash 4 Mk 2 Feedback Form

Cat. no.	Serial no.
PURCHASED BY	**PURCHASED FROM**
Company/Organization	Distributor
Department	
Address	Address
Tel.	Tel.
Fax	Date of delivery
Internet home page	
Date of purchase	
Your research area	
Dr. ☐ Mr. ☐ Mrs. ☐ Ms. ☐ Job title/Position	
Surname (block capitals)	First name (block capitals)
Internet e-mail address	

	Excellent	Above expectations	As expected	Below expectations	Comments
Reagent kit/Instructions	☐	☐	☐	☐	
Instrument/User manual	☐	☐	☐	☐	
Operational reliability	☐	☐	☐	☐	
Design	☐	☐	☐	☐	
Ease of use	☐	☐	☐	☐	
Operational costs	☐	☐	☐	☐	
Customer support	☐	☐	☐	☐	

Further instrument/system developments desired:

Further applications desired:

Where did you first learn about the product?

Would you like to receive information about other Thermo Fisher Scientific products?

Appendix D: Addresses

For the latest information on products and services, visit our worldwide web sites on the Internet at:

http://www.thermo.com

Manufactured by:

Thermo Fisher Scientific Oy
P.O. Box 100, FI-01621 Vantaa, Finland
Tel. +358-9-329 100, Fax +358-9-3291 0415
www.thermo.com

Distributed by:

Notes

Notes

Notes

DENLEY

SERVICE MANUAL FOR

WW004 WELLWASH 4 MICROPLATE WASHER

ISSUE: 5 November 1992

Service Department
Denley Instruments Ltd
Natts Lane
Billingshurst
West Sussex
RH14 9EY

☎ 0403-783441

WW004/853

CONTENTS

PAGE	SECTION 1	THEORY OF OPERATION
2	1.1	General Description
3	1.2	Pump Unit Assembly
4	1.3	Washer Unit Assembly
5	1.4	Control Logic PCB

PAGE	SECTION 2	MAINTENANCE
6	2.1	Preventative Maintenance
10	2.2	Fault Finding
12	2.3	Removal/Replacement Procedures
13	2.4	Calibration/Test Procedures

PAGE	SECTION 3	PARTS LIST
19	3.1	Spare Parts
20	3.2	Tools/Equimpent

PAGE	SECTION 4	DIAGRAMS
21	4.1	Diagrams

PAGE	SECTION 5	TECHNICAL BULLETINS
22	5.1	Programmable Switch Card

PAGE	NOTES
25	

© DENLEY INSTRUMENTS LTD.

The following paragraphs discuss the theory of operation of the Wellwash 4 Microplate Washer, and should be read with reference to the relevant drawings and diagrams.

These descriptions are intended to supply sufficient information for an understanding of the operation of the washer to be gained to aid diagnostic trouble-shooting.

1.1 General Description

The WW004 Wellwash 4 is designed to wash coated wells in a 12 x 8 format microplate. It comprises a Pump Unit and Washer unit which are connected by power, signal, liquid and air lines.

The **Pump Unit** consists of a double headed vacuum pump, with its associated tubing, housed within a polyurethane moulding. Mounted on either side of the moulding are high density polythene Wash Reagent and Waste Bottles. At the rear of the Pump Unit is the main power on/off switch.

Located on the left hand side of the **Washer Unit** is the Control Panel under which the microprocessor and associated control electronics are housed. Above the Plate Carrier slideway is the Wash Head which can be either 8 or 12 Way. A Plate Carrier locates the plate accurately beneath the Wash Head and incorporates a Priming Reservoir at its leading edge. The Carrier is indexed forward by means of a magnetic coupling to the drive system housed inside the Washer.

© DENLEY INSTRUMENTS LTD.

1.2 Pump Unit Assembly

Diagrams Required:-	004/053	General Assembly
	004/053	Items List (1 Sheet)
	004/054	Chassis Assembly
	004/054	Items Lists (6 Sheets)
	004/751	Wiring Diagram
	004/752	Plumbing Diagram
	004/752	Items List (1 Sheet)

1.2.1 Pump Unit Description

The Pump Unit Assembly has three main functions:

1. To provide electrical power for the Washer Unit.
2. To provide a pressurised supply of wash fluid to the Washer Unit.
3. To provide a vacuum supply and reservoir to the Washer Unit for the removal of waste fluid.

Housed within the unit are the following controls and components: Main Power Inlet and Power Outlet for Washer Unit, Power On/Off Switch, Mains Filter, Double Ended Pressure / Vacuum Diaphragm Pump and associated Filters, Silencers and Tubing, Waste Overflow Bottle.

Housed externally are the Fluid and the Waste Bottles and their associated Tubing.

Located in the case is the Pump which is a Double Ended Diagphram type with both IN ports joined together to provide maximum vacuum. A single OUT port is connected to the Fluid Bottle to provide the pressurised dispense, the remaining OUT port is exhausted via the rear of the Unit.

© DENLEY INSTRUMENTS LTD.

1.3 Washer Unit Assembly

Diagrams Required:-	004/050	General Assembly
	004/050	Items List (1 Sheet)
	004/051	Chassis Assembly
	004/051	Items Lists (3 Sheets)
	004/052	Cover Assembly
	004/052	Items List (1 Sheet)
	004/752	Plumbing Diagram
	004/752	Items List (1 Sheet)
	004/750	Wiring Diagram

1.3.1 Washer Unit Description

The Washer Unit Assembly has two main functions:

1. To provide positive location and indexing facilities for a 96 well microplate.
2. To control all aspects of the dispensing and aspirating of wash fluid via interchangeable programme cards.

Housed within the unit are the following controls and components: Main Power Inlet, Control Keyboard, Mains Filter, Transformer, Control Logic PCB, Carriage Indexing Motor and Belt Drive, Head Lift Motor, Pinch Valve, Dispensing Head, Vacuum Switch, Manifold Block and associated Tubing.

The Washer Unit is connected to the Pump Unit by fitting the Vacuum Fail tubing to the Vacuum Fail Switch, connecting the electrical signal plugs, then pushing the units together using the Mains connector and the Location Dowels for alignment.
Located inside the case is the drive motor for indexing of the microplate which is linked, via a drive belt and pulleys, to a magnetic linkage system on the microplate carrier. Raising and lowering of the head is achieved by a second motor driving an eccentric block linked by a sprung loaded rod. Dispensing and aspirating is achieved by inserting a suitable programme card, selecting the number of rows to be washed and pressing the start button.

© DENLEY INSTRUMENTS LTD.

1.4 Control Logic PCB

Diagrams Required:- 004/701 Circuit Diagram
004/750 Wiring Diagram

1.4.1 Control Logic PCB Description

The PCB is located inside the Washer Unit the function of which, when fitted with the appropriate programme card, is to automatically control all aspects of the washing and aspirating of a microplate.
The PCB utilises a single chip microprocessor UPD 8749 which incorporates CPU, RAM, EPROM and Input/Outputs.
The microprocessor and its associated support circuits are all contained on the PCB along with the control switches, input sensors, control outputs, display devices and power supplies.

The following is a more detailed circuit description. (Read in conjunction with circuit diagram 004/751)

IC1 is the microprocessor which has a built-in xtal oscillator controlled by XT1.
Inputs from the sensors enter the microprocessor via ports P22 to P28.
Inputs from the sensors enter the microprocessor via ports P22 to P28. Inputs from the Carriage Home and Carriage Index sensors are buffered, IC8 Pins 8 and 9, IC9 Pins 1 and 2.
Start and Prime switches are connected directly to the microprocessor INT or interrupt output.
SW9 the Internal Reset Switch connects directly to the microprocessor Reset Input along with the Power Up Reset components RP6 and C3.
The Serial Input Port of the microprocessor T0, takes its input from IC's 2, 3, 4, 5 and the Serial Extension Connector PL6. The Serial Input IC's 2, 3, 4 and 5 are shift registers with parallel load inputs connected to the Programme Card Socket PL7, thus allowing the remote selection of Wash Programmes.
All of the Shift Registers are loaded by SH/LD inputs being low and are subsequently shifted out by clocking the CLK inputs, both of these inputs are under direct control of the microprocessor via Ports 10 and 11.
Switch device DS1 is connected to Input Ports P14 to P17.

© DENLEY INSTRUMENTS LTD.

WARNING. VOLTAGES DANGEROUS TO HUMAN LIFE ARE PRESENT IN THIS INSTRUMENT. BEFORE REMOVING ANY COVERS, DISCONNECT THE INSTRUMENT FROM THE POWER SUPPLY.

2.1 Preventative Maintenance

We recommend that the listed items should receive periodic preventative maintenance to the following schedule.

1. Fluid Feed Tube (Washer)	Inspect	6mths
2. Pump Unit Pressure	Check	6mths
3. Wash Heads	Inspect	6mths
4. Pump Unit Filters	Inspect	12mths
5. Indexing Mechanism	Check	12mths

2.1.1 Fluid Feed Tube (Washer) Inspection.

Occasionally the tube passing through the pinch valve becomes permanently closed, i.e. it will not return to its normal shape when the valve opens in use. This tends to happen after extended periods of non-operation.

To unpinch, locate the valve under the wash head arm. Pull the tube gently through the pinch valve a few millimetres. The valve will now pinch in a new position.

If the Washer is now run, fluid will flow normally.
If the tube has permanently distorted replacement will be required to ensure correct dispensing.

To replace the tube, lift the Wash Head and disconnect the tube from the Manifold Block, remove the tube from the Pinch Valve and disconnect the tube from the Wash Head End Cap.

Replace the tubing and re-assemble by reversing the above steps.

© DENLEY INSTRUMENTS LTD.

2.1.2 Pump Unit Pressure and Vacuum Check.

To ensure correct volumes are dispensed it is neccessary that the Pump Unit is set and maintained at the correct setting of 6.0 - 6.5 p.s.i. (0.37 - 0.40 Bar).

To check the Pump Unit pressure setting, empty the Wash Reagent Bottle and disconnect the Pump Unit from the Washer Unit . Connect a Pressure Gauge (0-15 psi range) to the fluid feed pipe which would normally be connected to the Manifold Block in the Washer Unit. Connect the Unit to the appropriate mains supply and switch ON. A reading of between 6.0 and 6.5 p.s.i. should be obtained. If a reading outside these limits is obtained adjustment must be performed.

To adjust the pressure locate the Pressure Adjustment Screw which is a chromed lock nut and screw located in a recess at the front of the pump above the Mains Outlet. After releasing the lock nut the pressure may be adjusted by turning the screw, turning anti-clockwise will decrease the pressure, turning clockwise will increase the pressure. Once the pressure has been correctly set re-tighten the lock nut.

To ensure that the unit aspirates fully it is important that the Pump Unit vacuum is functioning at the correct setting of >0.7 bar.
To check the Pump Unit vacuum disconnect the Pump from the Washer Unit. Connect a Vacuum Flow Gauge to the vacuum pipe which would normally be connected to the Manifold Block on the Washer Unit. Connect the Pump Unit to the appropriate mains supply and switch ON. A reading of >0.7 bar should be obtained. If a reading outside this limit is obtained there is no adjustment available so a replacement Pump will be required.

2.1.3 Wash Head Inspection

To ensure even dispensing and washing it is neccessary that the Wash Heads and their end caps are kept clean and free of contamination and obstructions and that they are set to the correct height. Some wash reagents contain buffer salts which can crystallise when the instrument is not in use, this may cause clogging of of the wash / aspirate tips.
To inspect the condition of the Wash Heads and their End Caps it is neccessary to remove the Head from the Washer Unit. Lift the Head Assembly, grasp the Wash Head centrally and slide it down in the direction of tips until it clears the End Caps.

© DENLEY INSTRUMENTS LTD.

Using a De-clogging Tool, Part No. 004-319 available from the Service Dept, ensure all Dipense Tips are free from obstruction and clean as required. Check the End Caps for signs of contamination or obstructions and inspect condition of O Ring seals, clean and replace as required.

Refitting the Wash Head is a reversal of the removal procedure, ensure that the Head engages in the slots provided and that the O Rings in each End Cap are in position and undamaged.

To maintain correct and even washing it is also important that the Wash Head is set at the correct height above the microplate being used.
To check the height of the Wash Head load a Microplate onto the Plate Carrier, press the Start button, then switch Off the Mains Power Supply to the unit when the Wash Head is between two Rows. Verify that the gap between the delivery tubes in the head and the microplate being used is 1.0-1.5mm. If adjustment is necessary it can be achieved by slackening the lock nut beneath the dome nut on the Head Lift Rod, adjusting the dome head nut, and re-tightening the lock nut.

2.1.4 Pump Unit Filter Inspection

Periodic inspection of the Pump Unit filter is recommended to ensure correct operation, although replacement is seldom required.

To inspect the filter remove the Pump Unit cover by taking out 2 fixing screws on the underneath, 2 fixing screws at the front and 2 fixing screws at the rear of the unit. Lift the cover clear of the chassis. The filter is located at the front right hand corner of the chassis.
The filter cap can be removed without disconnection of the silicone tubing by firmly grasping the top of the filter and lifting in an upward direction. Removal of the cap will expose the filter element which should be lifted out and checked for excess contamination.
If the element is contaminated sufficiently to reduce its efficiency it should be replaced, Part No.000-727-008 available from the Service Dept.
Re-assemble by reversing the above steps.

IMPORTANT: Care should be taken when re-fitting Moulded Cover to avoid crimping of any tubing which may affect the Pump Units performance.

© DENLEY INSTRUMENTS LTD.

2.1.5 Indexing Mechanism Check

Periodic inspection of the Indexing Mechanism is recommended to ensure correct operation, although replacement is seldom required.

To inspect the Indexing Mechanism remove the Washer Unit cover by taking out 6 fixing screws on the underneath and 2 fixing screws at the rear of the unit. Lift the cover clear of the chassis. The Indexing Mechanism is located on the right hand side of the chassis.
The mechanism should be checked for any serious wear on the pulleys or on the sliding section and for the correct tension of the Drive Belt.
It is important that the position of the Opto-comb in relation to the Sliding Section is correct to provide central location of the Wash Head Tips in the Microplate. Adjustment is achieved by loosening the locking nuts on the Opto-comb moving it to the required position using the slots and re-tightening the lock nuts.
It is also important that the Drive Belt is correctly tensioned such that the sliding bracket moves smoothly while at the same time providing positive positional accuracy. Tension of the Drive Belt should be such that it is not tight enough to cause undue strain or stalling of the Drive Motor but not so loose as to cause "jumping" of teeth on the pulleys.
Adjustment is performed by loosening the M4 fixing screw on the underside of the chassis and moving the position of the Pulley Mounting Block to obtain the correct tension and re-tightening the fixing screw.
Re-assemble by reversing the above steps.

IMPORTANT: Care should be taken when re-fitting Moulded Cover to avoid damaging Indicator LED's.

© DENLEY INSTRUMENTS LTD.

2.2 Fault Finding

Given below is a short form fault finding chart for the Wellwash 4 which defines some hypothetical problems.

PROBLEM	POSSIBLE CAUSE	ACTION
No POWER ON indicator	Mains Lead not connected	Connect lead to an appropriate supply
	Fuse of Washer or Pump Unit blown	Replace fuse
	Pump Unit POWER switch is OFF	Switch POWER switch ON
	Pump & Washer not properly connected	Push Pump & Washer Units firmly together
VAC FAIL light continuously illuminated	Air Leaks	Check bottle caps for leaks and tighten as required
	Constricted tubing	Check tubing for kinks/collapse
	Pump Failure	Check that Pump Unit is switched ON.
		Check that Pump Unit is connected to the Washer Unit correctly
	Incorrectly adjusted Vacuum Switch	Re-calibrate Vacuum Switch(See 2.4.2)
Washer will not Prime	Programme Card missing	Insert Programme Card

© DENLEY INSTRUMENTS LTD.

PROBLEM	POSSIBLE CAUSE	ACTION
Poor aspiration	Air leaks	Check bottle caps for leaks & tighten as required
	Constricted tubing	Check tubing for kinks
	Pump Failure	Check Pump Unit is switched ON and is correctly connected to Washer Unit
No delivery of wash reagent into microplate	Feed tube in Pinch Valve constantly pinched	Pull tube through and reshape or replace (See 2.1.1)
	Air leaks at Wash Reagent bottle cap	Tighten cap, replace gasket if required
	Tubing leaks	Check tubing & tube connectors
	Dispensing Head blockage	Inspect Dispense Head (See 2.1.3)
	Pump Filter blocked	Inspect Pump filter (See 2.1.4)
Unequal dispense or aspirate of wash reagent	Microplate incorrectly positioned on Plate Carrier	Check position of Microplate
	One or more Dispense Tip blocked	Inspect Dispense Head & clean as required (See 2.1.3)
	Pump Unit pressure incorrectly set	Re-set Pump Unit pressure (See 2.1.2)

© DENLEY INSTRUMENTS LTD.

2.3 Removal/Replacement Procedures

The following paragraphs describe removal and replacement for various assemblies.

WARNING. VOLTAGES DANGEROUS TO HUMAN LIFE ARE PRESENT IN THIS INSTRUMENT. BEFORE REMOVING ANY COVERS, DISCONNECT THE INSTRUMENT FROM THE MAINS SUPPLY.

2.3.1 Diaphragm Pump Unit.

1. Remove the mains cable connector from the rear of the pump unit and disconnect the washer unit. Unscrew the Wash Reagent and the Waste Bottle caps and remove the bottles from their retaining straps.
2. Using a suitable screwdriver remove the Pump Unit Cover by taking out 2 fixing screws on the underneath, 2 fixing screws at the front and 2 fixing screws at the rear of the unit. Lift the cover clear of the chassis, some of the tubing in the unit will have to be disconnected.
3. Disconnect all tubing connections to pump.
4. Disconnect Live, Neutral and Earth connections to pump.
5. Using an M4 nutdriver or spanner remove the 4 fixing nuts on the underside of the chassis and the pump is free to be lifted from the unit.
6. To replace the pump reverse the above procedure.
   IMPORTANT: Care should be taken when re-fitting Moulded Cover to avoid crimping of any tubing which may affect the Pump Units performance.

2.3.2 Control Logic PCB.

1. Disconnect the Washer Unit from the Pump Unit.
2. Using a suitable screwdriver remove the Washer Unit cover by taking out 6 fixing screws on the underneath and 2 fixing screws at the rear of the unit. Lift the cover clear of the chassis.
3. Disconnect plugs from PCB, PL1 and PL5.
4. Disconnect Mains Supply connections to PCB at TB3.
5. Disconnect 15 Volt Power Supply to PCB at TB4.
6. Disconnect Motor Leads at TB1, TB2 and TB3.
7. Remove Nylon M3 fixing screw from REG 2.
8. Lift the Idler Pulley and Drive Belt clear from the mounting shaft.
9. Lift Sliding Profile Assembly clear of the Guiding Profile.
10. Remove 6 off M3 fixing nuts and washers.
11. The PCB is now free to be lifted from the chassis.
12. To replace the PCB reverse the above procedure.
    IMPORTANT: Care should be taken when re-fitting Moulded Cover to avoid damaging Indicator LED's.

© DENLEY INSTRUMENTS LTD.

2.3.3 Indexing Mechanism Assembly

1. Disconnect the Washer Unit from the Pump Unit.
2. Using a suitable screwdriver remove the Washer Unit cover by taking out 6 fixing screws on the underneath and 2 fixing screws at the rear of the unit. Lift the cover clear of the chassis.
3. Lift the Idler Pulley and Drive Belt clear from the mounting shaft.
4. Lift Sliding Profile Assembly clear of the Guiding Profile.
5. Release Drive Belt from Drive Pulley.
6. Grasp Sliding Profile Assembly and lift clear of the Guiding Profile.
7. The Guiding Profile can be removed by unscrewing the 3 x M3 fixing screws in the underside of the chassis.
8. To replace the Indexing Mechanism reverse the above procedure.
   IMPORTANT: Care should be taken when re-fitting Moulded Cover to avoid damaging Indicator LED's.

2.4 Calibration/Test Procedures

WARNING. VOLTAGES DANGEROUS TO HUMAN LIFE ARE PRESENT IN THIS INSTRUMENT. BEFORE REMOVING ANY COVERS, DISCONNECT THE INSTRUMENT FROM THE MAINS SUPPLY.

The following paragraphs describe adjustments, tests and calibration procedures that may be performed on this unit.

2.4.1 Control Logic PCB Calibration/Testing

The following section describes how to use the self test functions built into the Microprocessor IC.

To test/calibrate the PCb remove the Washer Unit cover by taking out 6 fixing screws on the underneath and 2 fixing screws at the rear of the unit. Lift the cover clear of the chassis, leave all electrical connections to the PCB intact including the keypad ribbon cable connection.

The basic test procedure is outlined below and is explained in further detail in the following sub-sections.

© DENLEY INSTRUMENTS LTD.

Basic Test Procedure Only for old WW4

1. Set switch 1 of the Dual in Line (DIL) switches, DS1 to ON.
2. Insert Programmable Switch card into Unit, all hexadecimal switches on the Card should be set to 0.
3. Apply mains power to the Washer Unit and press SW9 on the PCB, all indicator LED's should flash and the Audible Warning Device (AWD) should sound.
4. Press the Start key on the keypad. Insert a small screwdriver or similiar tool into the S1 TYPE and S2 TYPE switches on the Program Card, by turning the switches through all of their positions from 0 to F at each position an LED should flash and the Audible Warning Device should sound to confirm that the PCB is satisfactory.
   (See the note at the end of this section for binary LED displays when performing the above and following checks)
5. Press the Start key and repeat the above instructions for S1 REPT and S2 REPT switches.
6. Press the Start key and repeat the above instructions for S1 PAUS and S2 PAUS switches.
7. Press the Start key and repeat the above instructions for POSTWASH and PREWASH switches.
8. Press the Start key, then by pressing any of the Row Select keys 1 -12 their corresponding LED's on the PCB should illuminate and the AWD should sound.
9. Press the Start key, the setting of the DIL switch DS1 will now be displayed by the LED's permanently LD3 and LD4. LD4 will remain permanently illuminated in this mode and LD3 will flash as switch 1 on DS1 is switched On and Off.
10. Pressing the Start key will effectively place the unit into a manual condition where the test engineer has total control over the instruments operation.
    Pressing the Prime key checks that the Prime LED LD10 illuminates.
    Row key 1 is inoperative.
    Row key 2 checks the Audible Warning Device.
    Row key 3 checks that the Vacuum Fail LED, LD11 illuminates.
    Row key 4 checks the correct operation of the Head Lift Motor and the Head Lift position sensor with Row 8 LED, LD8 flashing and the AWD sounding as the Hall effect magnet passes the Hall Effect Device (IC14), to confirm correct operation.
    Row key 5 checks the forward drive of the Plate Indexing Mechanism and the correct operation of Indexing Sensor (OSW2). As the opto-comb passes through the Indexing Sensor (OSW2) both the Row 7 LED indicator (LD7) and the indicator LED LD13 will flash and the AWD will sound to confirm correct operation.

ONLY FOR OLD WW4 MODELS

© DENLEY INSTRUMENTS LTD.

Row key 6 checks the return drive of the Plate Indexing Mechanism and the correct operation of both the Indexing Sensor (OSW2) and the Home Sensor (OSW1). As the Opto-comb passes through the Indexing Sensor (OSW2) both the Row 7 LED (LD7) and the indicator LED, LD14 will flash and the AWD will sound to confirm correct operation. Returning the Indexing Mechanism to its Home position at the Home Sensor (OSW1) will cause the Row 6 LED to illuminate and the AWD to sound confirming correct operation.
Row key 7 checks operation of the Solenoid Valve, an audible click will be heard from the Valve and the indicator LED, LD16 will flash to confirm correct operation.
Row 8 key will exit from the last test.
Row 9 key will begin the test cycle again starting with the Prime LED illumination check.

NOTE: When Test Sequence has been completed DS1 Switch 1 must be returned to the OFF position.

BINARY DISPLAY ON ROW SELECT BUTTONS.

	1	2	4	8	Binary
S1 TYPE Switch	1	2	3	4	Row LED cond.
S2 TYPE Switch	5	6	7	8	Row LED cond.
Switch Setting					
0	OFF	OFF	OFF	OFF	
1	ON	OFF	OFF	OFF	
2	OFF	ON	OFF	OFF	
3	ON	ON	OFF	OFF	
4	OFF	OFF	ON	OFF	
5	ON	OFF	ON	OFF	
6	OFF	ON	ON	OFF	
7	ON	ON	ON	OFF	
8	OFF	OFF	OFF	ON	
9	ON	OFF	OFF	ON	
A	OFF	ON	OFF	ON	
B	ON	ON	OFF	ON	
C	OFF	OFF	ON	ON	
D	ON	OFF	ON	ON	
E	OFF	ON	ON	ON	
F	ON	ON	ON	ON	

ONLY FOR OLD WW4 MODELS

© DENLEY INSTRUMENTS LTD.

BINARY DISPLAY ON ROW SELECT BUTTONS.

	1	2	4	8	Binary
S1 REPT Switch	1	2	3	4	Row LED cond.
S2 REPT Switch	5	6	7	8	Row LED cond.
Switch Setting					
0	OFF	OFF	OFF	OFF	
1	ON	OFF	OFF	OFF	
2	OFF	ON	OFF	OFF	
3	ON	ON	OFF	OFF	
4	OFF	OFF	ON	OFF	
5	ON	OFF	ON	OFF	
6	OFF	ON	ON	OFF	
7	ON	ON	ON	OFF	
8	OFF	OFF	OFF	ON	
9	ON	OFF	OFF	ON	
A	OFF	ON	OFF	ON	
B	ON	ON	OFF	ON	
C	OFF	OFF	ON	ON	
D	ON	OFF	ON	ON	
E	OFF	ON	ON	ON	
F	ON	ON	ON	ON	

ONLY FOR OLD WW4 MODELS

BINARY DISPLAY ON ROW SELECT BUTTONS.

	1	2	4	8	Binary
S1 PAUS Switch	1	2	3	4	Row LED cond.
S2 PAUS Switch	5	6	7	8	Row LED cond.
Switch Setting					
0	OFF	OFF	OFF	OFF	
1	ON	OFF	OFF	OFF	
2	OFF	ON	OFF	OFF	
3	ON	ON	OFF	OFF	
4	OFF	OFF	ON	OFF	
5	ON	OFF	ON	OFF	
6	OFF	ON	ON	OFF	
7	ON	ON	ON	OFF	
8	OFF	OFF	OFF	ON	
9	ON	OFF	OFF	ON	
A	OFF	ON	OFF	ON	
B	ON	ON	OFF	ON	
C	OFF	OFF	ON	ON	
D	ON	OFF	ON	ON	
E	OFF	ON	ON	ON	
F	ON	ON	ON	ON	

© DENLEY INSTRUMENTS LTD.

BINARY DISPLAY ON ROW SELECT BUTTONS.

	1	2	4	8	Binary
POSTWASH Switch	1	2	3	4	Row LED cond.
PREWASH Switch	5	6	7	8	Row LED cond.
Switch Setting					
0	OFF	OFF	OFF	OFF	
1	ON	OFF	OFF	OFF	
2	OFF	ON	OFF	OFF	
3	ON	ON	OFF	OFF	
4	OFF	OFF	ON	OFF	
5	ON	OFF	ON	OFF	
6	OFF	ON	ON	OFF	
7	ON	ON	ON	OFF	
8	OFF	OFF	OFF	ON	
9	ON	OFF	OFF	ON	
A	OFF	ON	OFF	ON	
B	ON	ON	OFF	ON	
C	OFF	OFF	ON	ON	
D	ON	OFF	ON	ON	
E	OFF	ON	ON	ON	
F	ON	ON	ON	ON	

ONLY FOR OLD WW4 MODELS

© DENLEY INSTRUMENTS LTD.

2.4.2 Pump Unit Pressure Adjustment.

To check the Pump Unit pressure setting disconnect the Pump from the Washer Unit. Connect a Preesure Gauge (0-15 psi range) to the fluid feed pipe which would normally be connected to Manifold Block in the Washer Unit.
Connect the Pump Unit to the appropriate mains supply and switch ON. A reading of between 6.0 and 6.5 p.s.i. should be obtained. If a reading outside these limits is obtained adjustment must be performed.
To adjust the pressure locate the Pressure Adjustment Screw which is a chromed lock nut and screw located in a recess at the front of the pump above the Mains Outlet. After releasing the lock nut the pressure may be adjusted by turning the screw, turning anti-clockwise will decrease the pressure, turning clockwise will increase the pressure. Once the pressure has been correctly set re-tighten the lock nut.

2.4.3 Vacuum Fail Switch Calibration/Testing.

To check the function of the Vacuum Fail Switch connect the Pump Unit to the Washer Unit, connect to the appropriate mains supply and switch ON. To set the Vacuum Fail Switch, loosen the aspirate bottle cap, manually lift the Wash/Dispense Head and insert a small screwdriver into the silicone guide tube located in the vertical slot in the moulded case immediately behind the pinch valve. By pushing the screwdriver fully "home" location will be felt in the Vacuum Fail Adjustment screw. Turn the adjustment screw clockwise until the Vac Fail LED flashes. Turn the mains power off. Tighten aspirate bottle cap then turn mains power on. Vac Fail LED should now be extinguished. Perform a normal wash run and while the unit is in motion loosen the aspirate bottle cap, the Vac Fail LED should illuminate to confirm correct setting of the Vacuum Fail Switch.

Attention! in all WW 4 mk2 units the vacuum fail switch is in the back of the pump unit. You can adjust it by inserting a Phillips screw driver into white plastic hole in bottom left corner at the back of the pump unit.

© DENLEY INSTRUMENTS LTD.

3.2 Tools/Equipment

WW004/26	Declogging Tool	1
GR2/112	3mm Allen Key	1
BS400/109	2.5mm Allen Key	1
GR2-152	2.0mm Allen Key	1
000/960/003	Spanner	2
	Feeler Gauges	
WW004/010	Programmable Card	1
Pressure Gauge	Range 0-15 p.s.i.	
Vacuum Flow Gauge	Range 0-8 bar	

© DENLEY INSTRUMENTS LTD.

4.1 Diagrams.

This section contains the following diagrams:

004/050 Washer Unit General Assembly
004/050 Items List (1 Sheet)

004/051 Washer Chassis Assembly
004/051 Items Lists (3 Sheets)

004/052 Washer Cover Assembly
004/052 Items List (1 Sheet)

004/053 Pump Unit General Assembly
004/053 Items List (2 Sheets)

004/054 Pump Unit Chassis Assembly
004/054 Items Lists (2 Sheets)

004/066 Control Logic PCB Assembly
004/066 Items Lists (4 Sheets)

004/701 Control Logic Circuit Diagram

004/750 Washer Unit Wiring Diagram
004/751 Pump Unit Wiring Diagram

004/752 Plumbing Diagram
004/752 Items List (1 Sheet)

© DENLEY INSTRUMENTS LTD.

This section contains copies of the Technical Bulletins issued to date which relate to this instrument and whose content has not been covered elsewhere in this manual.

5.1 Programmable Switch Card.

5.1.1 S1 TYPE (Sequence 1 Type)

This switch controls the first type of wash routine to be performed by the Washer Unit.

Setting	Routine
0	No Routine.
1	Aspirate Only.
2	Aspirate and Fill move to next Row.
3	Aspirate, Fill, Aspirate move to next Row.
4 to F	No Routine.

5.1.2 S2 TYPE (Sequence 2 Type)

This switch is avaiable if, after the SW1 TYPE routine has been performed, a second different routine is required.
The S2 set of switches should only be used when a second wash routine is needed, for example when an Aspirate / Fill / Aspirate routine is required to be followed by an Aspirate / Fill routine, this would allow the user to get rid of any high concentration waste prior to washing with a built in soak time. Switch settings and corresponding routines are similiar to S1 TYPE .

Setting	Routine
0	No Routine.
1	Aspirate Only.
2	Aspirate and Fill move to next Row.
3	Aspirate, Fill, Aspirate move to next Row.
4 to F	No Routine.

5.1.3 S1 REPT (Sequence 1 Set repeats per Row or Tray)

This switch sets the number of repeats of the routine set on the S1 TYPE switch. On this switch setting 0 will in fact give 1 repeat routine, setting 1 will give 2 repeat routines, 2 will give 3 repeat routines etc.
Note. With S1 TYPE switch set in the Aspirate/Fill routine the number of repeat routines set is the number of repeat routines per TRAY.
With S1 TYPE switch set in the Aspirate/Fill/Aspirate routine the number of repeat routines set is the number of repeat routines per ROW.

5.1.4 S2 REPT (Sequence 2 repeats per Row or Tray)

This switch sets the number of repeats of the routine set on the S2 TYPE switch in exactly the same manner as the S1 REPT switch repeats the setting on the S1 TYPE switch. As above on this switch setting 0 will in fact give 1 repeat routine, setting 1 will give 2 repeat routines, 2 will give 3 repeat routines etc.

Note. With S2 TYPE switch set in the Aspirate/Fill routine the number of repeat routines set is the number of repeat routines per TRAY.

With S2 TYPE switch set in the Aspirate/Fill/Aspirate routine the number of repeat routines set is the number of repeat routines per ROW.

5.1.5 S1 PAUS (Sequence 1 pause time between Rows)

This switch controls the length of delay added to the overall time taken to wash a complete Row during the routine set on the S1 TYPE switch. The delay can be added incrementally in steps of 0.34 secs. from 0 secs. up to a maximum delay of 5.1 secs. according to the 0 to F setting of the switch, for example when the switch is set at position 8 (2.72 secs) the plate will take an extra 32.64 secs (12 x 2.72) to process in the 8-way format thereby giving a reliable "built-in" soak time.

5.1.6 S2 PAUS (Sequence 2 pause time between Rows)

This switch controls the length of delay added to the overall time taken to wash a complete Row during the routine set on the S2 TYPE switch. The delay can be added incrementally in steps of 0.34 secs. from 0 secs. up to a maximum delay of 5.1 secs. according to the 0 to F setting of the switch, for example when the switch is set at position 4 (1.36 secs) the plate will take an extra 16.32 secs (12 x 1.36) to process in the 8-way format thereby giving a reliable "built-in" soak time.

5.1.7 PREWASH / POSTWASH

Both the Prewash and the Postwash switches control the timing and hence the ˆSvolumeˆS of liquid dispensed during the routines set on S1 TYPE and S2 TYPE switches. The switches work on an overlapping time base and so with certain combinations of Prewash and Postwash switch settings no dispense will occur. To avoid this situation it is recommended that the Prewash switch is set to position 7, as this has been found to be the optimum position for most users, and that the Postwash switch be used in the range of positions from 5 to F to avoid the "no dispense" situation.

© DENLEY INSTRUMENTS LTD.

5.1.8 PREWASH (Delay time from Head down position to liquid dispense)

This switch controls the length of delay between when the Dispense Head is at the bottom of the plate well and the liquid starting to dispense during the routines set on S1 TYPE and S2 TYPE switches. The delay can be added incrementally in steps of 0.04 secs. from a minimum setting of 0.11 secs to a maximum of 0.71 secs. Setting the switch to position 0 gives a 0.11 secs. delay, position 1 gives 0.15 secs. delay, position 2 gives 0.19 secs. delay etc.

Note. Although the Prewash timing is adjustable customers are advised to leave the switch set to Position 7 as during our own and independent testing this has been found to be the optimum position.

5.1.9 POSTWASH (Delay time from Head down position to liquid dispense stop)

This switch controls the length of delay between when the Dispense Head is at the bottom of the plate well and the liquid stopping dispensing during the routines set on S1 TYPE and S2 TYPE switches. The delay can be added incrementally in steps of 0.04 secs. from a minimum setting of 0.27 secs. to a maximum of 0.87 secs. Setting the switch to position 5 gives a 0.47 secs. delay, position 6 gives 0.51 secs. delay, position 7 gives 0.55 secs. delay etc.

5.1.10 8-WAY / 12-WAY Switch

This switch sets the washer to be used as either an 8-way (8 rows) or a 12-way (12 rows) washer.

With switch 1 set to ON and switch 2 set to OFF the unit will wash up to 8 rows with a 12-way wash head fitted.

With switch 1 set to OFF and switch 2 set to ON the unit will wash up to 12 rows wih an 8-way wash head fitted.

© DENLEY INSTRUMENTS LTD.

Spare parts

Wellwash 4 / 4Mk2

ThermoFisher SCIENTIFIC

Spare parts

Contents

SUBJECT *PAGE*

Cover page 1
Contents 2
Main parts 3
Washer track assembly..... 4
Control assembly 6
Pump unit assembly 8
Miscellaneous 10
Accessories 11

NOTE! All Spare parts that are considered as Recommended Spare parts to service offices have in theyre stock are marked with *.

Spare parts

Main parts

POS	*ITEM*		*CAT.*
1.	Carriage assembly		004/084L2
2.	Membrane panel		004/644 *
3.	Washer track assembly	See page 4	004/052L2
4.	Control assembly, 230V	See page 6	006/053AL2
	Control assembly, 115V	See page 6	006/053BL2
5.	Pump unit assembly, 230V	See page 8	006/052AL2
	Pump unit assembly, 115V	See page 8	006/052BL2

WASHER TRACK ASSEMBLY

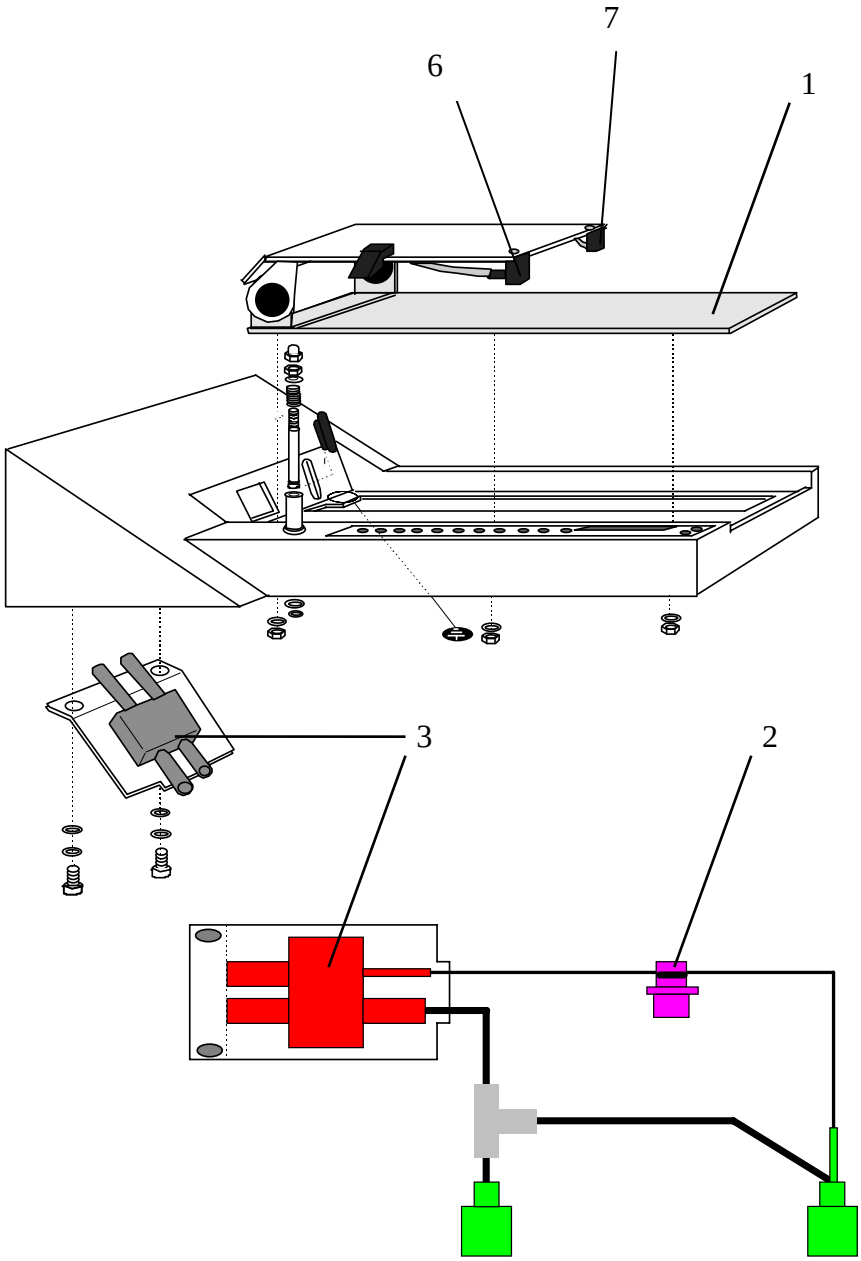

Spare parts

Washer track assembly

POS	*ITEM*	*CAT.*
1.	Track plate assembly.....	004/055C
2.	2 way pinch valve	000717019 *
3.	Manifold assembly.....	004/060L2
4.	Solenoid grounding wire.....	004/088L1
6.	L/hand End Cap Assy.....	004/077
7.	R/hand End Cap Assy.....	004/078

CONTROL ASSEMBLY

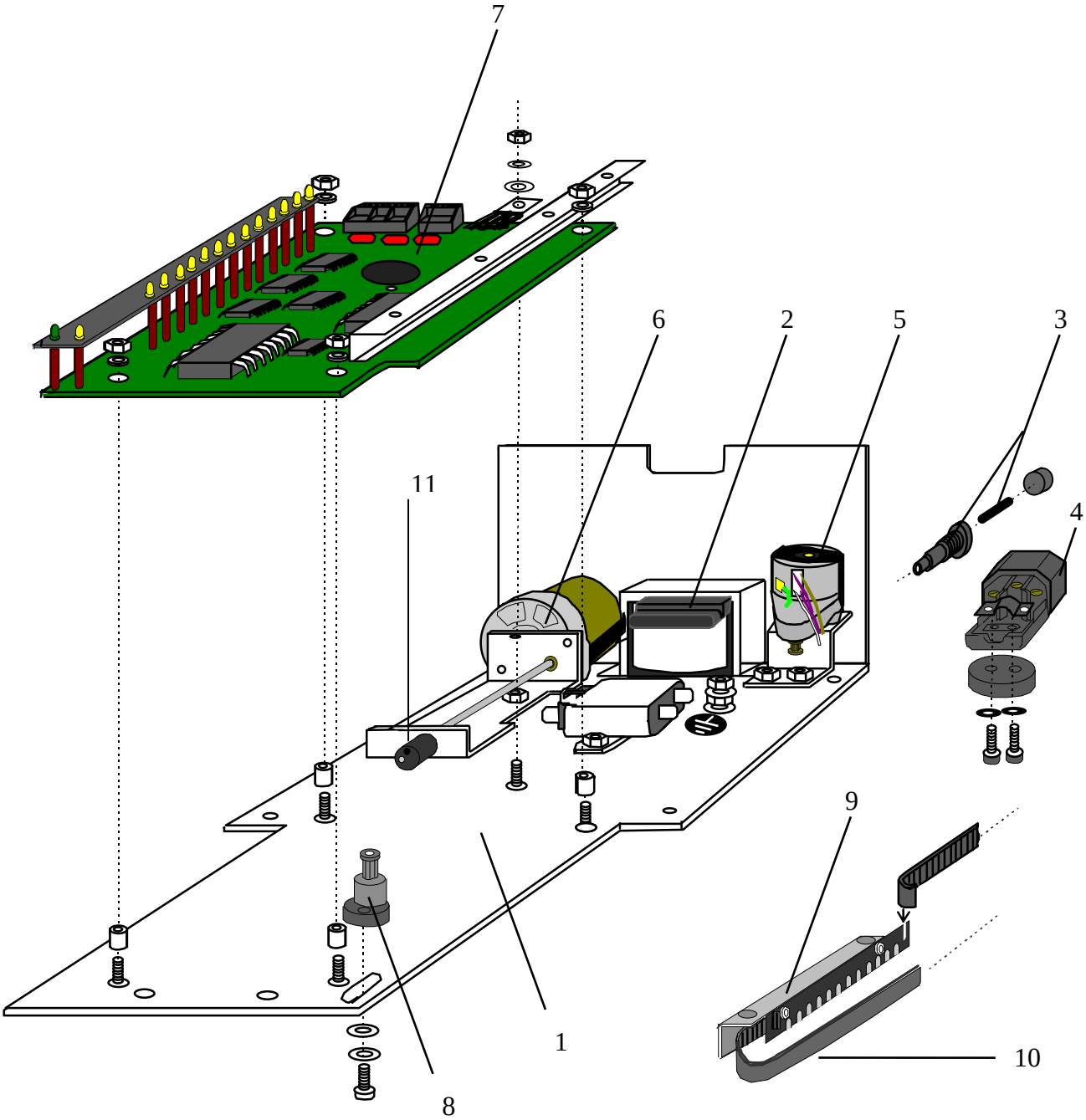

ThermoFisher SCIENTIFIC

Spare parts

Control assembly

POS	*ITEM*		*CAT.*
1.	Main plate assembly, 230V	Incl. items 2-6	006/058AL2
	Main plate assembly, 115V	Incl. items 2-6	006/058BL2
2.	Transformer, 230V	P.O. 1	004/075AL1
	Transformer, 115V	P.O. 1	004/075BL1
3.	Fuse frame assembly	P.O. 1	004/072L1
4.	Mains filter assembly	P.O. 1	004/073L1
5.	Track motor assembly, 230V	P.O. 1	006/076AL1
	Track motor assembly, 115V	P.O. 1	006/076BL1
6.	Headlift motor assembly, 230V	P.O. 1	004/056AL1*
	Headlift motor assembly, 115V	P.O. 1	004/056BL1
7.	Control pcb, 230V		N03868
	Control pcb, 115V		006/080BL1
8.	Pulley support assembly		004/058
9.	Sliding profile assembly	Incl. item 10	004/071L1
10.	Mini pitch belt	P.O. 9	000767007
11.	Eccentric		004/300*

PUMP UNIT ASSEMBLY

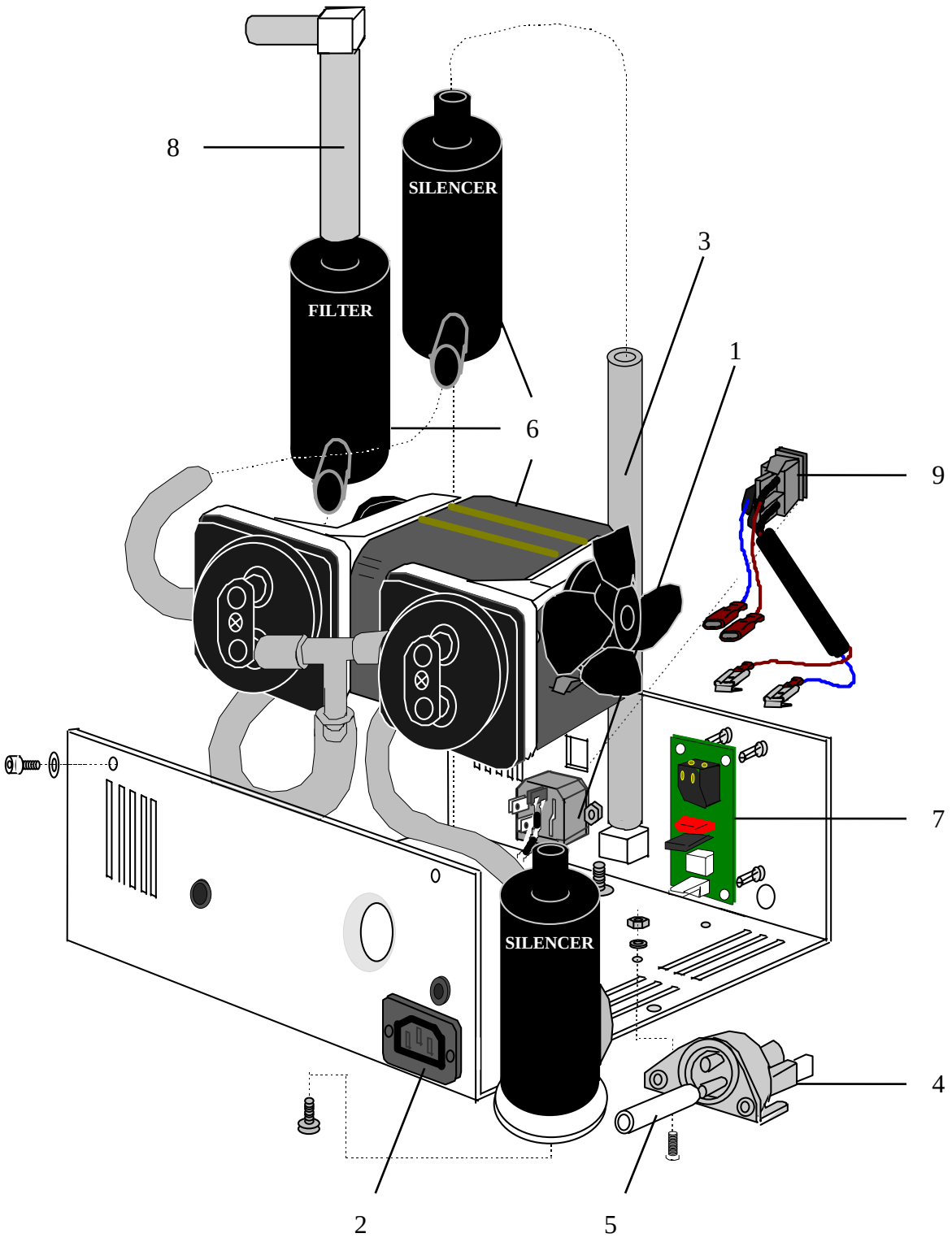

ThermoFisher
SCIENTIFIC

Spare parts

Pump unit assembly

POS	*ITEM*	*CAT.*
1.	Main switch, male	004/087L1
2.	Main switch, female	004/086L1
3.	Outlet tube assembly	004/511L1
4.	Vacuum switch	1204460 *
5.	Vacuum tube assembly	006/069L1
6.	Pump assembly, 230V	004/067A
	Pump assembly, 115V	004/067B
7.	Pump control pcb	1514341
	Pump control pcb (before s/n 006-9-5101)	006/060
8.	125 ml bottle's tube assembly	004/512L1
9.	Mains plug	004/085L1
	Waste level sensor assembly	1514319

Spare parts

Miscellaneous

ITEM	*CAT.*
Mains cord, USA	1210520
Mains cord, EURO	1210550
Fuse 0.5A, 220-240V	1210840 *
Fuse 1.0A, 220-240V	1210890 *
Fuse 2.0A, 110-120V	1210920
Fuse 0.5A, 110-120V	000716001
Silicone tube, 3.18 x 1.98	000788004
Silicone tube, 5.0 x 1.5	000788005
Silicone tube, 5.5 x 2.5	AM50-019
Pump Service kit	000837001 *
Declogging tool	004/319 *
Packing materials, Wellwash 4/4Mk2	1514417
Service manual, Wellwash 4/4Mk2	WW004/853
Preventative maintenance kit for WW4mk2	SP-00099 *

Spare parts

Accessories

ITEM	*CAT.*
12-way Wash Head	WW004/1
12-way Programme Card (1 and 4 washes), ...	WW006/2L2 2)
12-way Programme Card (1 and 4 washes), for ww4mk2	WW006/2C1 3)
12-way Programme Card (2 and 3 washes), Denley	WW006/3L2 2)
12-way Programme Card (2 and 3 washes), for ww4mk2	WW006/3C1 3)
8-way Wash Head	WW004/11
8-way Programme Card (1 and 4 washes), Denley	WW004/12L 1)
8-way Programme Card (1 and 4 washes)	WW006/12L2 2)
8-way Programme Card (1 and 4 washes)	WW006/12C1 3)
8-way Programme Card (2 and 3 washes), Denley	WW004/13L 1)
8-way Programme Card (2 and 3 washes), ...	WW006/12L2 2)
8-way Programme Card (2 and 3 washes) ..	WW006/12C1 3)
Plate-Holder	WW004/20
Overflow Bottle	WW004/21
2 litre Wash or Waste Bottle with plain cap	WW004/22
Adaptor Plate for Flexible microplates	WW004/27
Remote Pump Extension Kit	WW004/28
Spare O-ring pack (5 of each)	WW004/29
4.5 litre Bottle with plain cap	WW004/30
4.5 litre Bottle conversion kit including dispense bottle	WW004/31
4.5 litre Bottle conversion kit including aspirate bottle	WW004/32
8-way Half-Area Wash Head	WW004/34
2 litre Wash or Waste Bottle with quick release cap	WW004/35
2 litre Waste Bottle with quick release cap	N03283 4)
2 litre Waste Bottle with quick release cap and level sense assy	1514313 4)
Waste level sensor assembly	1514319 4)
Second Dispense Bottle Kit	WW004/39
Wash Height Adaptor	WW004/48
Programmable Programme Card	WW006/10C1
2 litre labelled Wash or Waste Bottle	WW934/1

1) Used in instruments manufactured before the serial number 004-078

2) Used in instruments manufactured after the serial number 004-078
3) For WW4mk2
4) For instruments made after s/n 006-9-4693

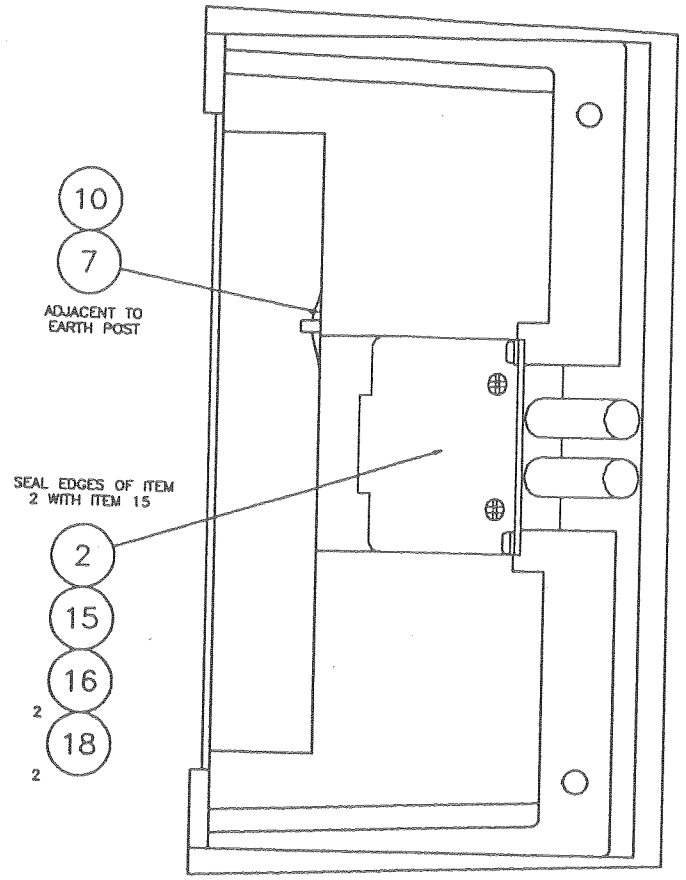

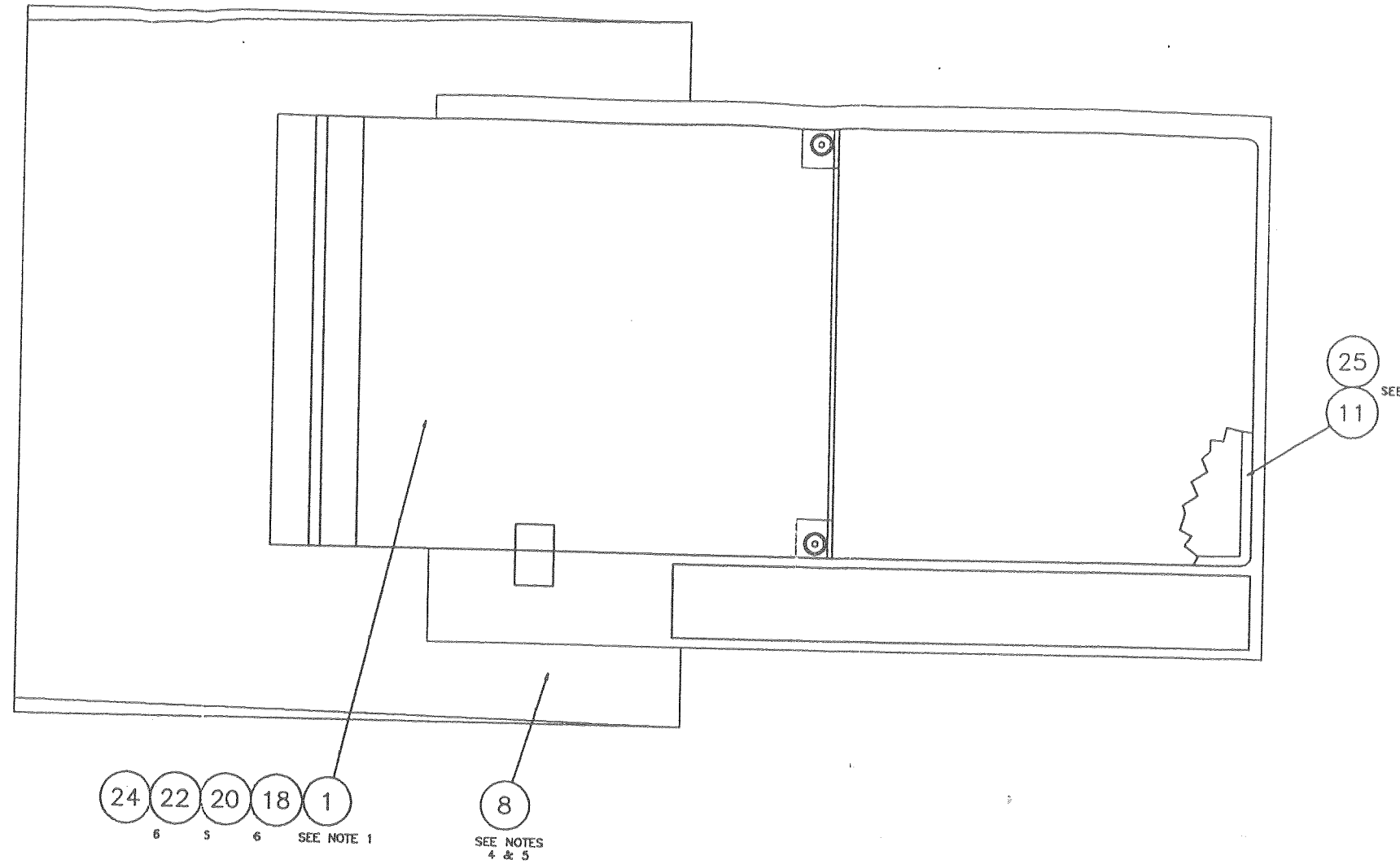

NOTE:–

1. ENSURE ITEM 1 HAS A CONCAVE BOW LENGTHWISE OF 1–2mm BEFORE FITTING TO COVER, TIGHTEN NUTS USING TORQUE DRIVER TO 10cNM, TIGHTEN CNTR FIXINGS FIRST THEN OUTER FIXINGS – DO NOT OVERTIGHTEN. REMOVE ANY SURPLUS SILICONE GREASE AFTER TIGHTENING.
2. LUBRICATE ITEM 11 THOROUGHLY WITH ITEM 25 & FIT IN RECESS.
3. PLUMBING FOR VARIANTS A,C,D,E & F SEE 004/752. FOR VARIANT B SEE 004/753.
4. DRILL OUT 15 HOLES IN ITEM 8 FOR LED'S TO ø4.
5. DRILL OUT 6 HOLES IN ITEM 8 TO ø3.2 TO ACCEPT STUDS IN ITEM 1.

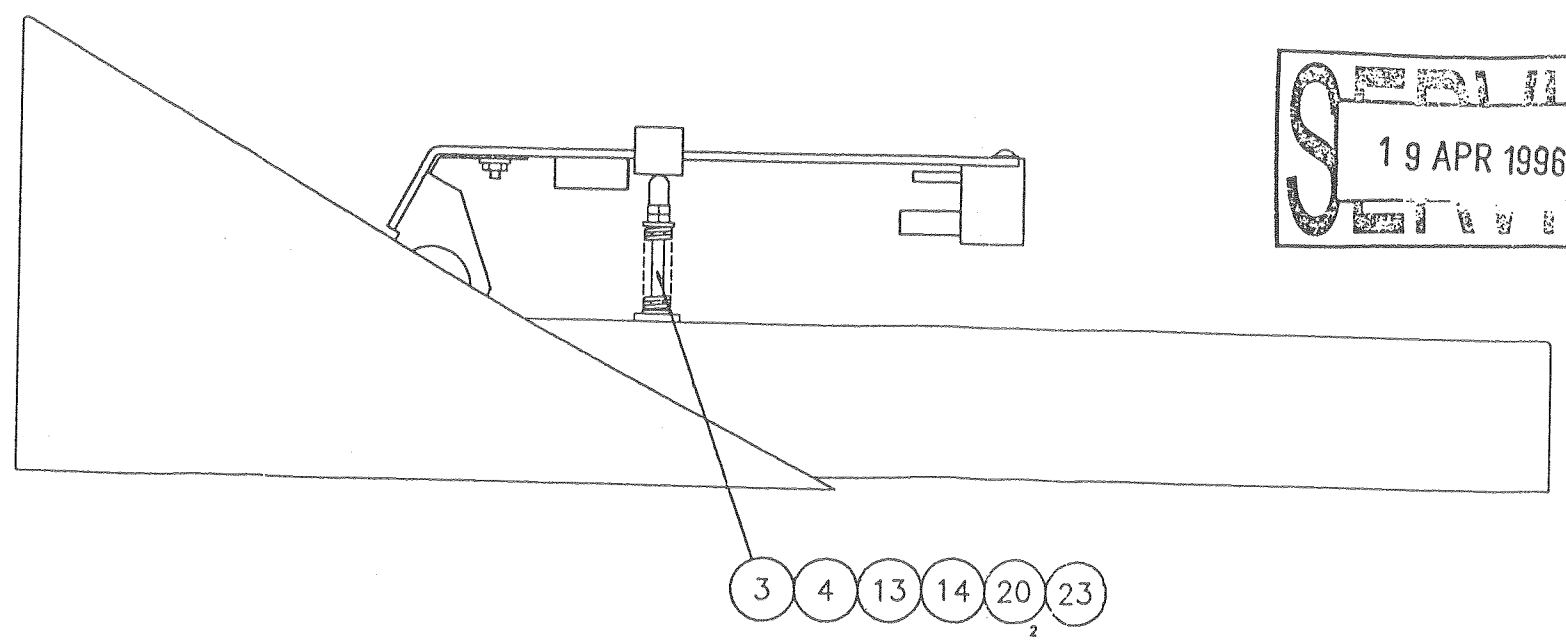

SERVICE
19 APR 1996

VARIANTS:–

'a' DENLEY VERSION
'b' OBSOLETE
'c' DPC VERSION
'd' RESERVED
'e' OBSOLETE
'f' ORGANON VERSION

APPROVED S.DOWNES	GEN TOL: X ± 0.5 X.X ± 0.2 X.XX ± 0.1 HOLES ± 0.05 ANGULAR ± 0.5 DEG UNLESS OTHERWISE STATED							DIMENSIONS:mm		SCALE: 1:1	
CHECKED P.J.FOX	MATERIAL SEE ITEMS LIST	FINISH ------									
DRAWN D.NAPPER	THIS DRAWING IS THE COPYRIGHT OF DENLEY INST. LTD. COPIES IN WHOLE OR PART MUST NOT BE MADE WITHOUT THE WRITTEN CONSENT OF THE COMPANY. © 1995	TITLE COVER ASSEMBLY (WASHER)	12	9.9.93	2370	JWH					
			ISS	DATE	ECN No.	CHK	ISS	DATE	ECN No.	CHK	

DENLEY BILLINGS SUSSEX,E RH1

SHEET No. 1 OF 1	DEPT 22	DRAWING NUMBER 004/052*

USED ON 004/050

ITEM	DRAWING No	TITLE	QTY	REMARKS
	004/055a	HEADLIFT ASSEMBLY	1	
2	004/060	PIPE EXCHANGE BLOCK ASSEMBLY	1	
3	004/301	HEADLIFT PIN	1	
4	004/313	HEADLIFT KNOB	1	
5				
6				
7	000543901	CABLE TIE BASE	1	
8	004/631a	P.U. MOULDING (WASHER)	1	
9				
10	000891001	EARTH SYMBOL	1	
	004/646	'O' RING - SILICONE RUBBER	1	
12				
13	000770013	SPRING	1	
14	000820031	CIRCLIP	1	
15	000883001	SILICON SEALANT	A/R	
16	000802049	SCREW M3 x 8 PANHEAD POZI	2	
17				
18	000804076	WASHER M3 WAVE	8	
19				
20	000804008	WASHER M3 PLAIN	8	
22	000803008	M3 FULL NUT	6	
	000803025	M3 HALF NUT	1	
24	000881242	LOCTITE NUTLOC 242e	A/R	
25	000555083	SILICON GREASE	A/R	

19 APR 1996

DENLEY

BILLINGSHURST,
SUSSEX.ENGLAND.
RH14 9EY

APPROVED S.DOWNES

ECKED D.NAPPER

DRAWN D.NAPPER

THIS DRAWING IS THE COPYRIGHT OF DENLEY INST. LTD. COPIES IN WHOLE OR PART MUST NOT BE MADE WITHOUT THE WRITTEN CONSENT OF THE COMPANY. © 1993

ISS	DATE	ECN No.	CHK	ISS	DATE	ECN No.	CH
11	9.9.93	2370					

TITLE

DENLEY
COVER ASSY (WASHER)

SHEET	DEPT	I/LIST FOR DRG No.	
No. 1 OF 1	22	004/052A	A4

WW 004

ACCORDANCE TO BS308 | * SHARP EDGES | CURRENT ENGINEERING STANDARDS | AUTOCAD R12

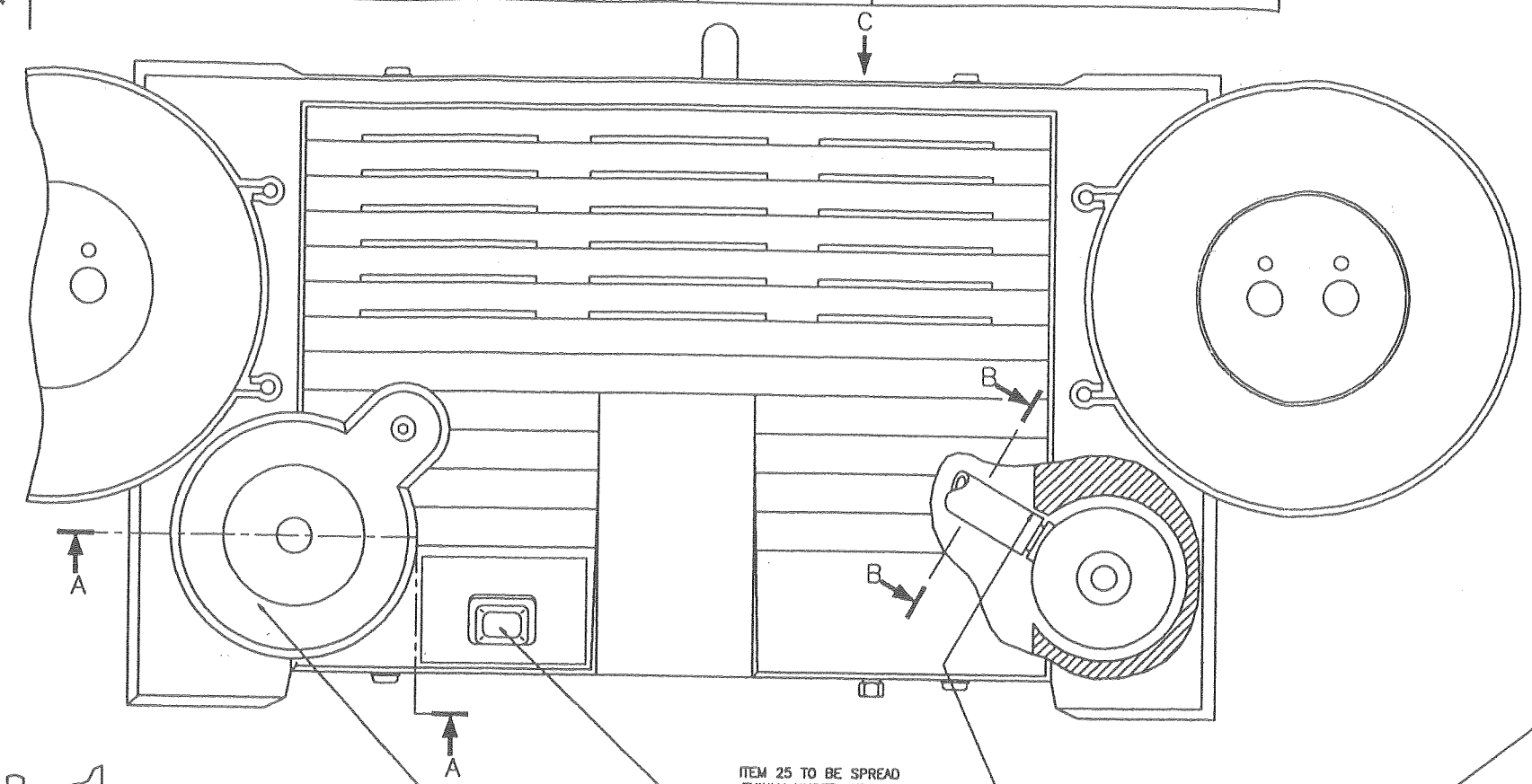

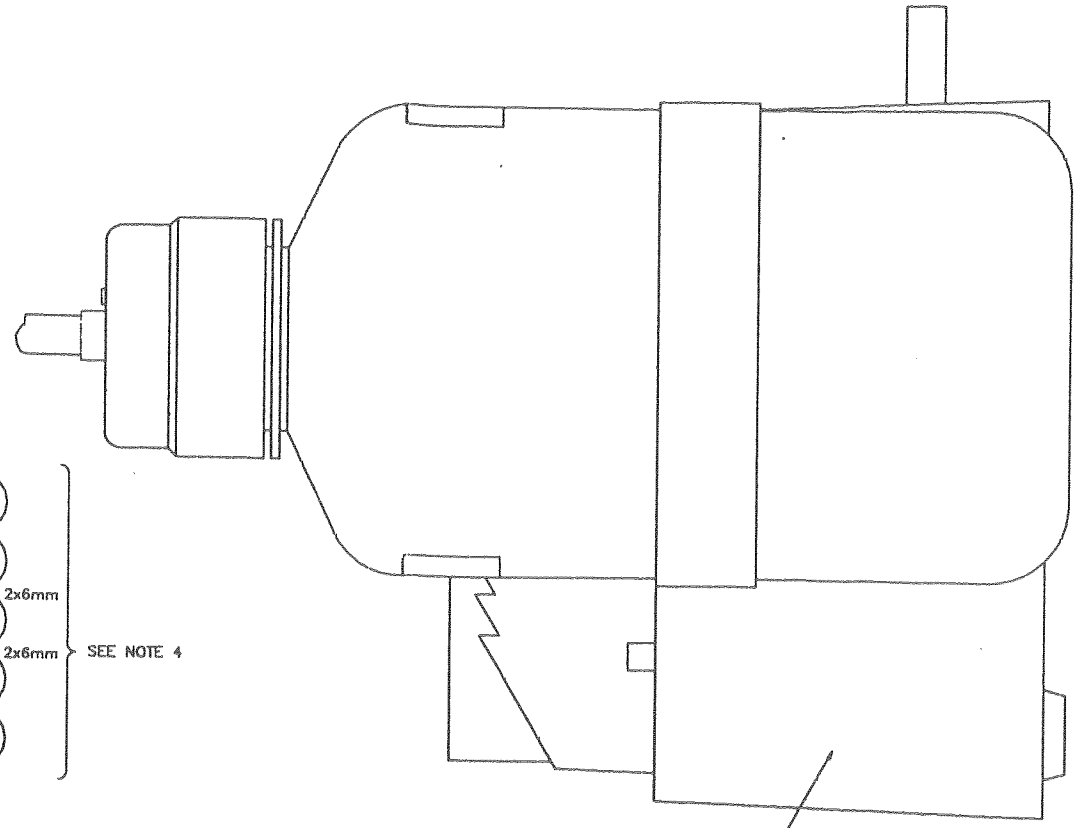

38
36
32 2x6mm
33 2x6mm
5
SEE NOTE 4

1x6mm 2x6mm
30 31 35 37
SEE NOTE 4

3 17 20

ITEM 25 TO BE SPREAD THINLY UNDER ITEM 4
4 16 23 24 25
SEE NOTE 2

SEE NOTE 3

6

8 9 10 14
325mm 2
2 POS'NS

28

26 2

1

20 6 18 6

27 2

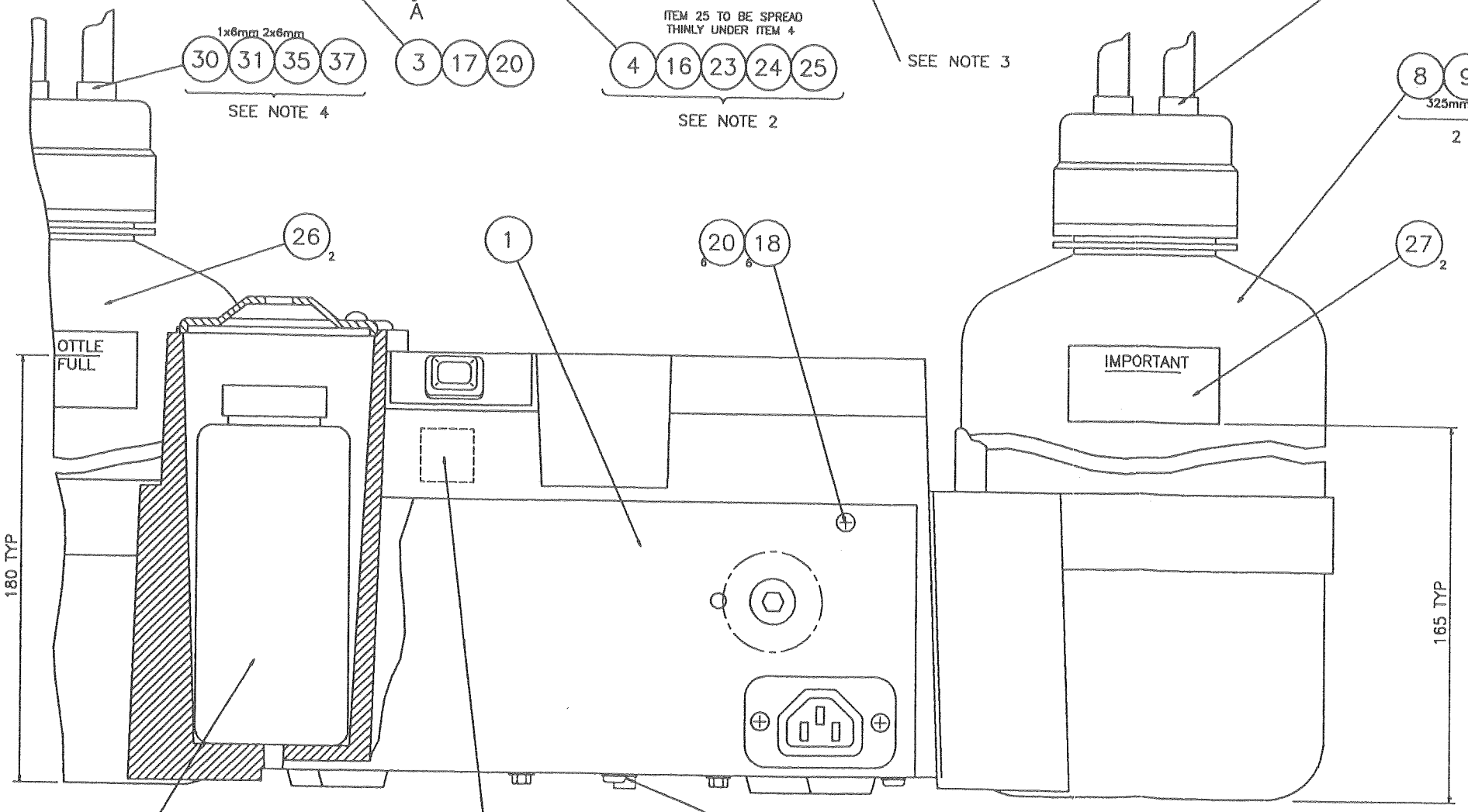

15 11

SECTION A – A

12 13
TO SECURE VACUUM TUBING ONLY

19 2 22 2
TRANSIT SCREW – FIT & PAINT RED AFTER UNIT TEST PRIOR TO TRANSFER TO PACKING DEPARTMENT.

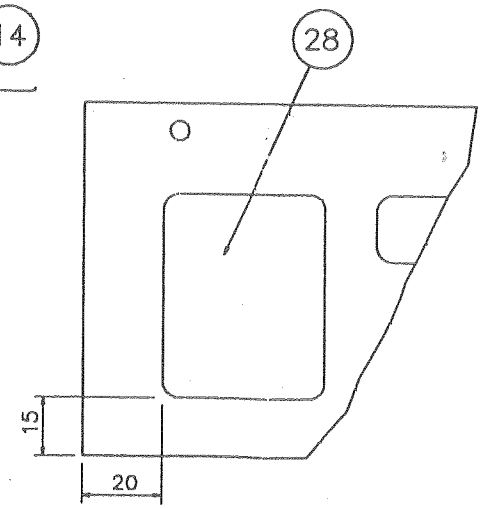

PART VIEW ON ARROW 'C'

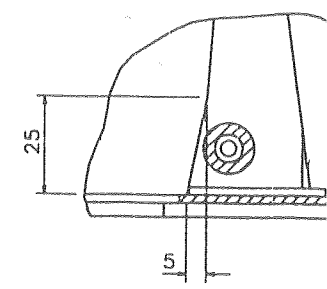

PART SECTION E
(COVER SHOWN CUT AW

VARIANT NOTE:–
'a' VERSION 220–240V 50HZ
'b' VERSION 110–120V 60HZ

NOTES:–
(1) SET PUMP PRESSURE TO 6 TO 6.5 PSI
(2) VARIANT 'b' ONLY:– FOR SWITCH CONNECTIONS SEE 004/054b W/SCHEDULE
(3) RELIEVE SHARP EDGE OF MOULDING ADJACENT TO SILENCER OUTLET TUBE AS DETAILED TO GIVE TAPERED FLAT FACE 25mm LONG, ENSURE THAT SILENCER OUTLET IS POSITIONED AS NEAR TO MOULDING AS POSSIBLE.
(4) SEE 004/752 FOR PLUMBING DETAILS.
(5) ITEM 41 USED BUT NOT SHOWN

SEALU
19 APR 1996

APPROVED S.DOWNES	GEN TOL: X ± 0.5 X.X ± 0.2 X.XX ± 0.1 HOLES ± 0.05 ANGULAR ± 0.5 DEG UNLESS OTHERWISE STATED					DIMENSIONS:mm			SCALE: 1:1			DENLEY BILLI SUSS	
CHECKED A.PARTRIDGE	MATERIAL SEE ITEMS LIST	FINISH -------											
DRAWN DN / PJF	THIS DRAWING IS THE COPYRIGHT OF DENLEY INST. LTD. COPIES IN WHOLE OR PART MUST NOT BE MADE WITHOUT THE WRITTEN CONSENT OF THE COMPANY. © 1995	TITLE GENERAL ASSEMBLY PUMP UNIT	11	22.11.93	2630	JWH						SHEET No. 1 OF 1	DEPT 22
			10	13.9.93	2371	JWH							DRAWING NUME 004/053A/
			ISS	DATE	ECN No.	CHK	ISS	DATE	ECN No.	CHK			

USED ON 004/050

ITEM	DRAWING No	TITLE	QTY	REMARKS
1	004/054A	CHASSIS ASSEMBLY - PUMP UNIT	1	
2				
3	004/636	CATCH BOTTLE CAVITY LID	1	
4				
5	AM50-019	SILICONE TUBE	1465	mm LONG
6	004/621A	PU MOULDING - PUMP UNIT	1	
7				
8	000907002	ELASTIC - RED	650	mm LONG
	000867005	NYLON DOWEL	4	
10	934/330	BOTTLE CAP MOD	2	
11	004/308	BOTTLE CAP MOD	1	
12	000543428	CABLE TIE	1	
13	000543901	CABLE TIE BASE	1	
14	000839003	BOTTLE	2	
15	000839009	BOTTLE (150ml)	1	
16				
17	000800686	SCREW M4 x 10 BUTTON HD	1	
18	000802085	SCREW M4 x 8 PAN HD POZI	6	
19	000800885	SCREW M4 x 8 CAP HD	2	
20	000804078	WASHER M4 WAVE	7	
21				
22	000804010	WASHER M4 PLAIN	2	
23				
24				
25				

SERIAL
19 APR 1996

DENLEY

BILLINGSHURST, SUSSEX, ENGLAND. RH14 9EY

APPROVED S.DOWNES

CHECKED .FOX

DRAWN DN/PJF

THIS DRAWING IS THE COPYRIGHT OF DENLEY INST. LTD. COPIES IN WHOLE OR PART MUST NOT BE MADE WITHOUT THE WRITTEN CONSENT OF THE COMPANY. © 1994

ISS	DATE	ECN No.	CHK	ISS	DATE	ECN No.	CHK
10	2.9.94	3137					

TITLE
GENERAL ASSEMBLY - PUMP UNIT
220-240V 50HZ

SHEET No. 1 OF 2

DEPT 22

I/LIST FOR DRG No. 004/053A

A4

USED ON WW 004

ITEM	DRAWING No	TITLE	QTY	REMARKS
26	000892010	LABEL "BOTTLE FULL"	2	
27	000892007	LABEL "IMPORTANT"	2	
28	A153-010	RATING LABEL	1	
29				
30	000840004	HEAT SHRINK TUBING RED	6mm	12.7 I/D
31	000840005	HEAT SHRINK TUBING BLUE	12mm	12.7 I/D
32	000840006	HEAT SHRINK TUBING YELLOW	12mm	12.7 I/D
33	000840007	HEAT SHRINK TUBING BLACK	12mm	12.7 I/D
35	000891003	DOT MARKER ADHESIVE BACKED BLUE	1	4 DIA
[illegible]	000891005	DOT MARKER ADHESIVE BACKED RED	1	4 DIA
37	000891004	DOT MARKER ADHESIVE BACKED YELL	1	4 DIA
38	000891006	DOT MARKER ADHESIVE BACKED BLACK	1	4 DIA
39				
40				
41	000881242	LOCTITE NUTLOC 242E	A/R	
42				

19 APR 1996

DENLEY

BILLINGSHURST, SUSSEX, ENGLAND. RH14 9EY

APPROVED S.DOWNES

CHECKED J.FOX

DRAWN D.NAPPER

THIS DRAWING IS THE COPYRIGHT OF DENLEY INST. LTD. COPIES IN WHOLE OR PART MUST NOT BE MADE WITHOUT THE WRITTEN CONSENT OF THE COMPANY. © 1993

ISS	DATE	ECN No.	CHK	ISS	DATE	ECN No.	CH
4	13.9.93	2371					

TITLE
GENERAL ASSEMBLY - PUMP UNIT
220-240V 50HZ

SHEET No. 2 OF 2

DEPT 22

I/LIST FOR DRG No. 004/053A

A

USED ON 004/050 [redacted]

ITEM	DRAWING No	TITLE	QTY	REMARKS
	004/054B	CHASSIS ASSEMBLY - PUMP UNIT	1	
2				
3	004/636	CATCH BOTTLE CAVITY LID	1	
4	004/122A	SWITCH PLATE	1	
5	AM50-019	SILICONE TUBE	1465	mm LONG
6	004/329A	PU MOULDING - PUMP UNIT	1	
7				
8	000907002	ELASTIC - RED	650	mm LONG
9	000867005	NYLON DOWEL	4	
10	934/330	BOTTLE CAP MOD	2	
	004/308	BOTTLE CAP MOD	1	
12	000543428	CABLE TIE	1	
13	000543901	CABLE TIE BASE	1	
14	000839003	BOTTLE	2	
15	000839009	BOTTLE (150ml)	1	
16	000921006	SWITCH COVER	1	
17	000800686	SCREW M4 x 10 BUTTON HD	1	
18	000802085	SCREW M4 x 8 PAN HD POZI	6	
19	000800885	SCREW M4 x 8 CAP HD	2	
20	000804078	WASHER M4 WAVE	7	
21				
22	000804010	WASHER M4 PLAIN	2	
23	000803008	NUT M3 FULL HEX	2	
24	000804076	WASHER M3 WAVE	2	
25	000883001	SILICONE SEALANT	A/R	

19 APR 1996

DENLEY

BILLINGSHURST, SUSSEX, ENGLAND. RH14 9EY

ISS	DATE	ECO No.	CHK	ISS	DATE	ECO No.	CHK
7	16.9.91	1479	DHN				
6	11.4.91	1227	—				
5	24.7.90	815	—				
4	13.6.88	724	—				
3	2.12.87	481	—				
2	12.10.87	471	—	9	28.9.92	1946	[illegible]
1	15.1.87	—	—	8	16.1.92	1575	DHN

APPROVED S.DOWNES

CHECKED —

DRAWN DN/PJF

THIS DRAWING IS THE COPYRIGHT OF DENLEY INST. LTD. COPIES IN WHOLE OR PART MUST NOT BE MADE WITHOUT THE WRITTEN CONSENT OF THE COMPANY. © 1987

TITLE
GENERAL ASSEMBLY - PUMP UNIT
110-120V 60HZ

SHEET No. 1 OF 2 | DEPT 22 | I/LIST FOR DRG No. 004/053B | A4

USED ON **WW 004B**

ITEM	DRAWING No	TITLE	QTY	REMARKS
26	000892010	LABEL "BOTTLE FULL"	2	
27	000892007	LABEL "IMPORTANT"	2	
28	000900020	RATING LABEL	1	
29				
30	000840004	HEAT SHRINK TUBING RED	6mm	12.7 I/D
31	000840005	HEAT SHRINK TUBING BLUE	12mm	12.7 I/D
32	000840006	HEAT SHRINK TUBING YELLOW	12mm	12.7 I/D
33	000840007	HEAT SHRINK TUBING BLACK	12mm	12.7 I/D
34				
35	000891003	DOT MARKER ADHESIVE BACKED BLUE	1	4 DIA
36	000891005	DOT MARKER ADHESIVE BACKED RED	1	4 DIA
37	000891004	DOT MARKER ADHESIVE BACKED YELL	1	4 DIA
38	000891006	DOT MARKER ADHESIVE BACKED BLACK	1	4 DIA
39				
40				
41	000881242	LOCTITE NUTLOC 242E	A/R	
42				

19 APR 1996

DENLEY

BILLINGSHURST,
SUSSEX, ENGLAND.
RH14 9EY

APPROVED S.DOWNES

CHECKED .FOX

DRAWN D.NAPPER

THIS DRAWING IS THE COPYRIGHT OF DENLEY INST. LTD. COPIES IN WHOLE OR PART MUST NOT BE MADE WITHOUT THE WRITTEN CONSENT OF THE COMPANY. © 1993

ISS	DATE	ECN No.	CHK	ISS	DATE	ECN No.	CHK
4	13.9.93	2371					

TITLE
GENERAL ASSEMBLY - PUMP UNIT
110-120V 60HZ

SHEET No. 2 OF 2

DEPT 22

I/LIST FOR DRG No. 004/053B

A4

004/053	22	004/054A/B	DRAWING PREPARED IN ACCORDANCE TO BS308	IF IN DOUBT : ASK	REMOVE ALL BURRS & SHARP EDGES	ALL WORK TO COMPLY WITH CURRENT ENGINEERING STANDARDS

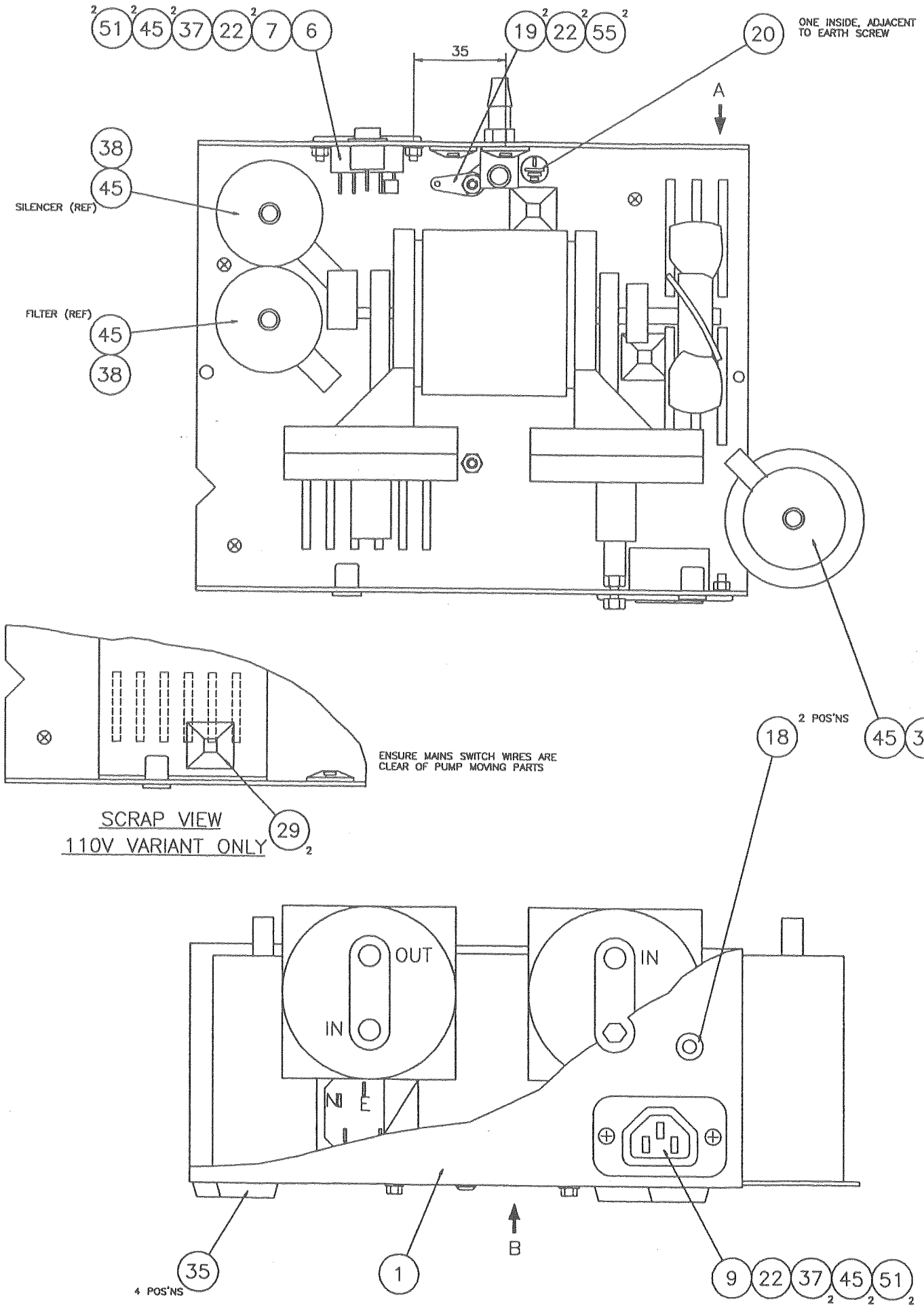

SCRAP VIEW
110V VARIANT ONLY

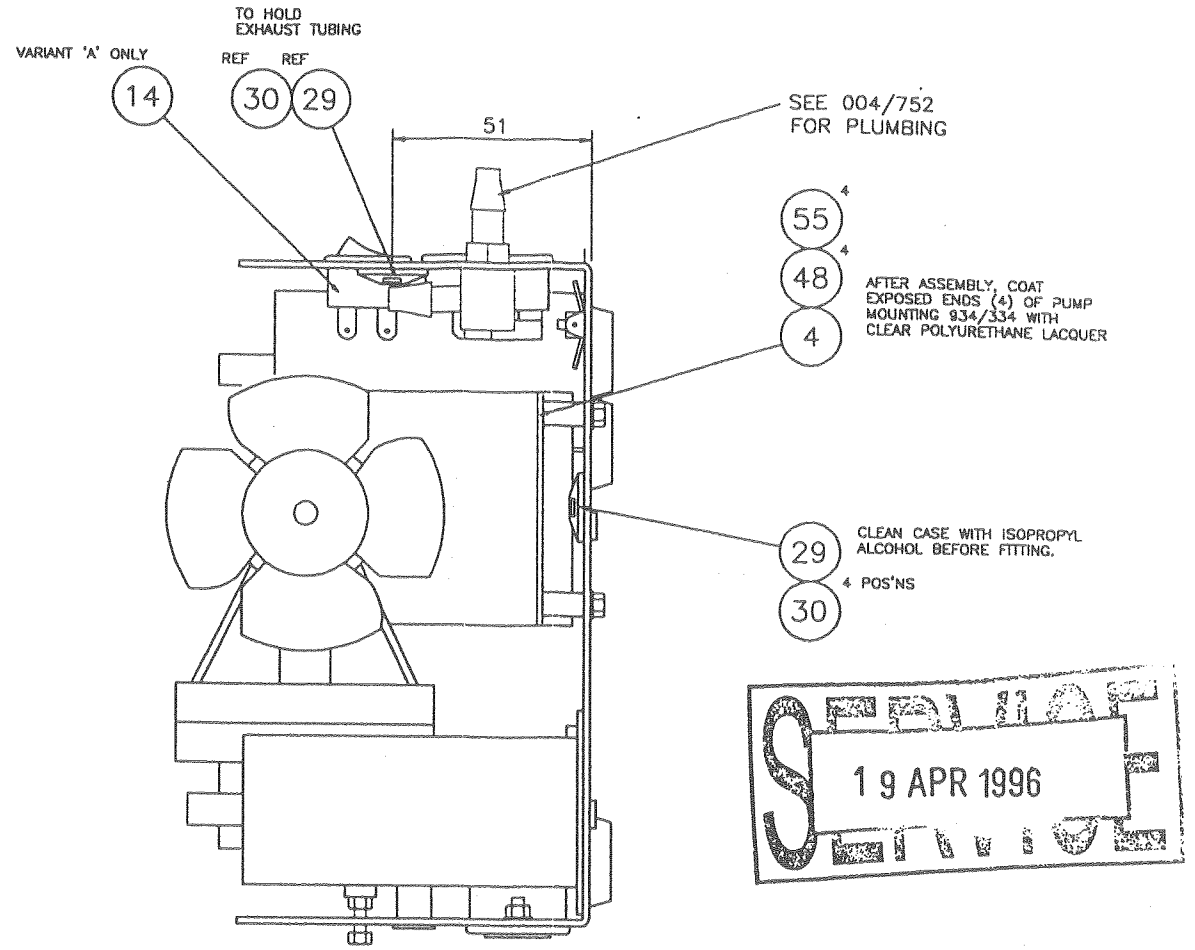

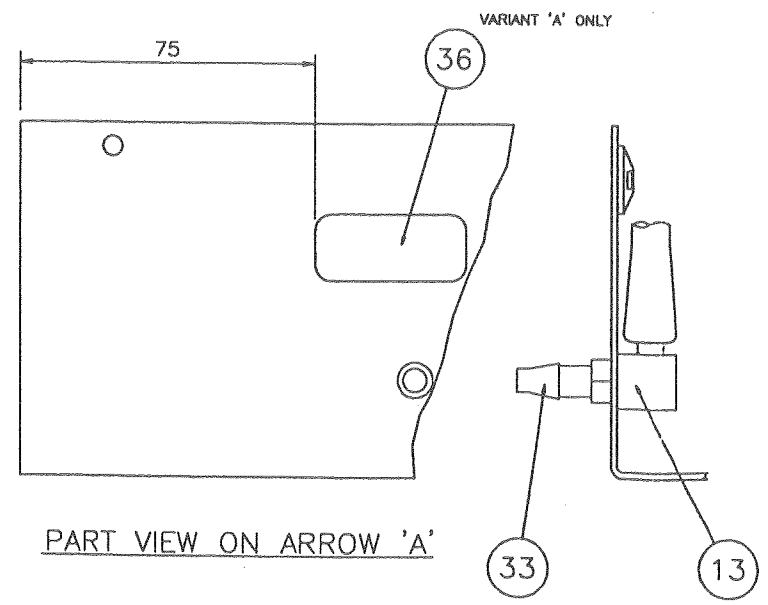

PART VIEW ON ARROW 'A'

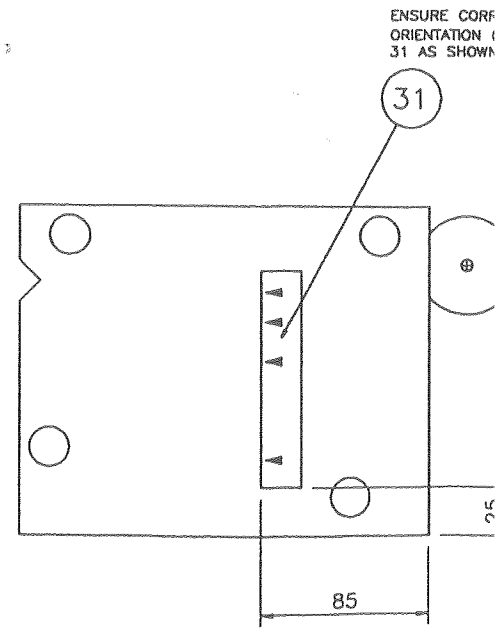

VIEW ON ARROW 'B'
SCALE 1:2

NOTES:-

(1) WIRES TO BE LACED TOGETHER WITH ITEM 30, STARTING 5mm FROM TERMINATIONS OR AS CLOSE AS PRACTICAL

(2) 4 OFF ITEM 16 USED BUT NOT SHOWN, VARIANT 'b' ONLY.

VARIANTS:-
'c' DPC VERSION 240V 50HZ
'd' DPC VERSION 110V 60HZ

SERVICE 19 APR 1996

APPROVED S.DOWNES	GEN TOL: X ± 0.5 X.X ± 0.2 X.XX ± 0.1 HOLES ± 0.05 ANGULAR ± 0.5 DEG UNLESS OTHERWISE STATED						DIMENSIONS:mm		SCALE: 1:1		
CHECKED A.PARTRIDGE	MATERIAL SEE ITEMS LIST	FINISH -------									
DRAWN D.NIPPER	THIS DRAWING IS THE COPYRIGHT OF DENLEY INST. LTD. COPIES IN WHOLE OR PART MUST NOT BE MADE WITHOUT THE WRITTEN CONSENT OF THE COMPANY. © 1996	TITLE CHASSIS ASSEMBLY PUMP UNIT	15	3.1.96	5458	GF					
			14	13.9.93	2371	JWH					
			ISS	DATE	ECN No.	CHK	ISS	DATE	ECN No.	CHK	

DENLEY BILL SUSS

SHEET	DEPT	DRAWING NUM
No. 1 OF 1	22	004/054A

DENLEY Billingshurst, Sussex RH14 9EY England

Item	Drawing No.	Description	Qty	Remarks
1	004/101a	CHASSIS PUMP UNIT	1	
2				
3				
4	004/067a	PUMP SUB ASSEMBLY	1	
5	004/330	MODIFIED ELBOW CONNECTOR	1	
6	000709004	SOCKET/FUSE HOLDER	1	
7	000412396	FUSE 1A A/S	2	
8				
9	000709008	MAINS SOCKET	1	
10				
11	AM50-019	SILICONE TUBE	630	mm
12	004/062	VACUUM TUBE ASSEMBLY	1	
13	000757017	ELBOW CONNECTOR	1	
14	000706038	ON/OFF SWITCH	1	
15	000727005	PIGGY BACK CRIMP CONNECTOR	2	
16	000727002	SHROUDED RECEPTICAL (3/16")	6	
17				
18	000743017	FRICTION BUSH	2	
19	000780007	M4 EARTH TAG	2	S/PROOF
20	000891001	EARTH SYMBOL	1	
21				
22	000827003	SLEEVING H20 x 20	8	
23	C2266	WIRE 16/0.2 EQUIP GREY/BLUE	310	mm
24	C3259	WIRE 16/0.2 EQUIP GRN/YLLW	305	mm
25	C1563	WIRE 16/0.2 EQUIP BLUE	80	mm
26	C1561	WIRE 16/0.2 EQUIP BROWN	90	mm
27	C6060	WIRE 16/0.2 EQUIP RED/BROWN	310	mm
28				
29	000543901	CABLE TIE BASE	4	
30	000543428	CABLE TIE	10	
31	000892012	LABEL "TRANSIT SCREW"	1	
32				
33	000757031	BARBED CONNECTOR	1	
34				
35	000789008	FEET	4	
36	000892019	LABEL "TUV TEST MARK"	1	
37	000802449	SCREW M3 x 8 RSD CSK HD POZI	4	
38	000801831	SCREW No6 x 3/8" PN HD S/TAP POZ	3	
39				
40				
41				
42				
43				
44				
45	000804076	WASHER M3 WAVE	7	
46				
47				
48	000804078	WASHER M4 WAVE	4	
49				
50				

1 9 APR 1996

Next Assembly:004/053A

THIS DRAWING IS THE COPYRIGHT OF DENLEY INSTRUMENTS LTD. COPIES IN WHOLE OR PART MUST NOT BE MADE WITHOUT THE WRITTEN CONSENT OF THE COMPANY © 1995

ISS	DATE	ECN NO.	CHK	ISS	DATE	ECN NO.	CHK
12	4.1.96	5458	LF				

Drawn:	Checked:	Approved:	Title:	Sheet	Dept	I/L for Drg No.
D.Napper P.J.Fox	A.Partridge	S.Downes	CHASSIS ASSEMBLY - PUMP UNIT 220-240V 50HZ	No.1 of 2	22	004/054A

DENLEY Billingshurst, Sussex RH14 9EY England

Item	Drawing No.	Description	Qty	Remarks
51	000803008	NUT M3 FULL HEX	4	
52				
53				
54				
55	000803010	NUT M4 FULL HEX	6	
56				
57				
58				
59				
60				
61				
62				
63				
64				
65				
66				
67				
68				
69				
70				
71				
72				
73				
74				
75				

19 APR 1996

Next Assembly 004/053A									
THIS DRAWING IS THE COPYRIGHT OF DENLEY INSTRUMENTS LTD. COPIES IN WHOLE OR PART MUST NOT BE MADE WITHOUT THE WRITTEN CONSENT OF THE COMPANY © 1995									
	12	4.1.96	5468						
	ISS	DATE	ECN NO.	CHK	ISS	DATE	ECN NO.	CHK	
Drawn: D.Napper P.J.Fox	Checked: D.Roderick	Approved: S.Downes	Title: CHASSIS ASSEMBLY - PUMP UNIT 220-240V 50HZ		Sheet No.2 of 2	Dept 22	I/L for Drg No. 004/054A		

DENLEY Billingshurst, Sussex RH14 9EY England

Item	Drawing No.	Description	Qty	Remarks
1	004/101b	CHASSIS PUMP UNIT	1	
2				
3				
4	004/067b	PUMP SUB ASSEMBLY	1	
5	004/330	MODIFIED ELBOW CONNECTOR	1	
6	000709004	SOCKET/FUSE HOLDER	1	
7	000716005	FUSE 2A A/S	2	
8				
9	000709008	MAINS SOCKET	1	
10				
11	AM50-019	SILICONE TUBE	630	mm
12	004/062	VACUUM TUBE ASSEMBLY	1	
13	000757017	ELBOW CONNECTOR	1	
14	000706037	SWITCH	1	
15	000727005	PIGGY BACK CRIMP CONNECTOR	2	
16	000727002	SHROUDED RECEPTICAL (3/16")	6	
17				
18	000743017	FRICTION BUSH	2	
19	000780007	M4 EARTH TAG	2	S/PROOF
20	000891001	EARTH SYMBOL	1	
21				
22	000827003	SLEEVING H20 x 20	4	
23	C6124	WIRE 20 AWG 10/30 GREY	310	mm
24	C6144	WIRE 18 AWG 16/30 GREY/YLLW	315	mm
25	C6121	WIRE 20 AWG 10/30 BLUE	310	mm
26	C6122	WIRE 20 AWG 10/30 BROWN	310	mm
27	C6126	WIRE 20 AWG 10/30 RED	310	mm
28				
29	000543901	CABLE TIE BASE	6	
30	000543428	CABLE TIE	12	
31	000892012	LABEL "TRANSIT SCREW"	1	
32				
33	000757031	BARBED CONNECTOR	1	
34				
35	000789008	FEET	4	
36				
37	000802449	SCREW M3 x 8 RSD CSK HD POZI	4	
38	000801831	SCREW No6 x 3/8" PN HD S/TAP POZ	3	
39				
40				
41				
42				
43				
44				
45	000804076	WASHER M3 WAVE	7	
46				
47				
48	000804078	WASHER M4 WAVE	4	
49				
50				

19 APR 1996

Next Assembly: 004/053B

THIS DRAWING IS THE COPYRIGHT OF DENLEY INSTRUMENTS LTD. COPIES IN WHOLE OR PART MUST NOT BE MADE WITHOUT THE WRITTEN CONSENT OF THE COMPANY © 1995

ISS	DATE	ECN NO.	CHK	ISS	DATE	ECN NO	CHK
13	4.1.96	5468	CF				

Drawn:	Checked:	Approved:	Title:	Sheet	Dept	I/L for Drg No.
D.Napper P.J.Fox	A.Partridge	S.Downes	CHASSIS ASSEMBLY - PUMP UNIT 110- 120V 60HZ	No.1 of 2	22	004/054B

DENLEY Billingshurst, Sussex RH14 9EY England

Item	Drawing No.	Description	Qty	Remarks
51	000803008	NUT M3 FULL HEX	4	
52				
53				
54				
55	000803010	NUT M4 FULL HEX	6	
56				
57				
58				
59				
60				
61				
62				
63				
64				
65				
66				
67				
68				
69				
70				
71				
72				
73				
74				
75				

SERVICE
19 APR 1996

Next Assembly: 004/053b								
THIS DRAWING IS THE COPYRIGHT OF DENLEY INSTRUMENTS LTD. COPIES IN WHOLE OR PART MUST NOT BE MADE WITHOUT THE WRITTEN CONSENT OF THE COMPANY © 1995	13	4.1.96	5458	[illegible]				
	ISS	DATE	ECN NO.	CHK	ISS	DATE	ECN NO.	CHK

Drawn:	Checked:	Approved:	Title:	Sheet	Dept	I/L for Drg No.
D.Napper P.J.Fox	D.Roderick	S.Downes	CHASSIS ASSEMBLY - PUMP UNIT 110-120V 60HZ	No.2 of 2	22	004/054B

NEXT ASSY	DEPT	DRAWING NUMBER					
004/051	22	004/066A/B	THIRD ANGLE PROJECTION DRAWING PREPARED IN ACCORDANCE TO BS308	IF IN DOUBT : ASK	REMOVE ALL BURRS & SHARP EDGES	ALL WORK TO COMPLY WITH CURRENT ENGINEERING STANDARDS	

NOTES:–

1) ALL SWITCHES ON ITEM 56 ARE SET TO OFF POSITION
2) SLEEVE POSITIVE LEG OF LEDS – 15 PLACES USING ITEM 75
3) WHEN FLOW SOLDERING IS USED TO ASSEMBLE THIS PCB, THE 14 HOLES MARKED THUS * ARE TO REMAIN FREE OF SOLDER – MASK AS NECESSARY
4) ONLY MASK THESE HOLES ON VARIANT 'B' (110–120V 60HZ)
5) LEADS OF ITEM 77 MUST BE SLEEVED USING ITEM 75
6) INSULATING SLEEVE ITEM 80 TO BE FITTED TO BOTH LEADS OF C19 (5mm PER LEAD) BEFORE INSERTION.

VARIANTS:–

a VARIANT 220/240V 50HZ
b VARIANT 110/120V 60HZ

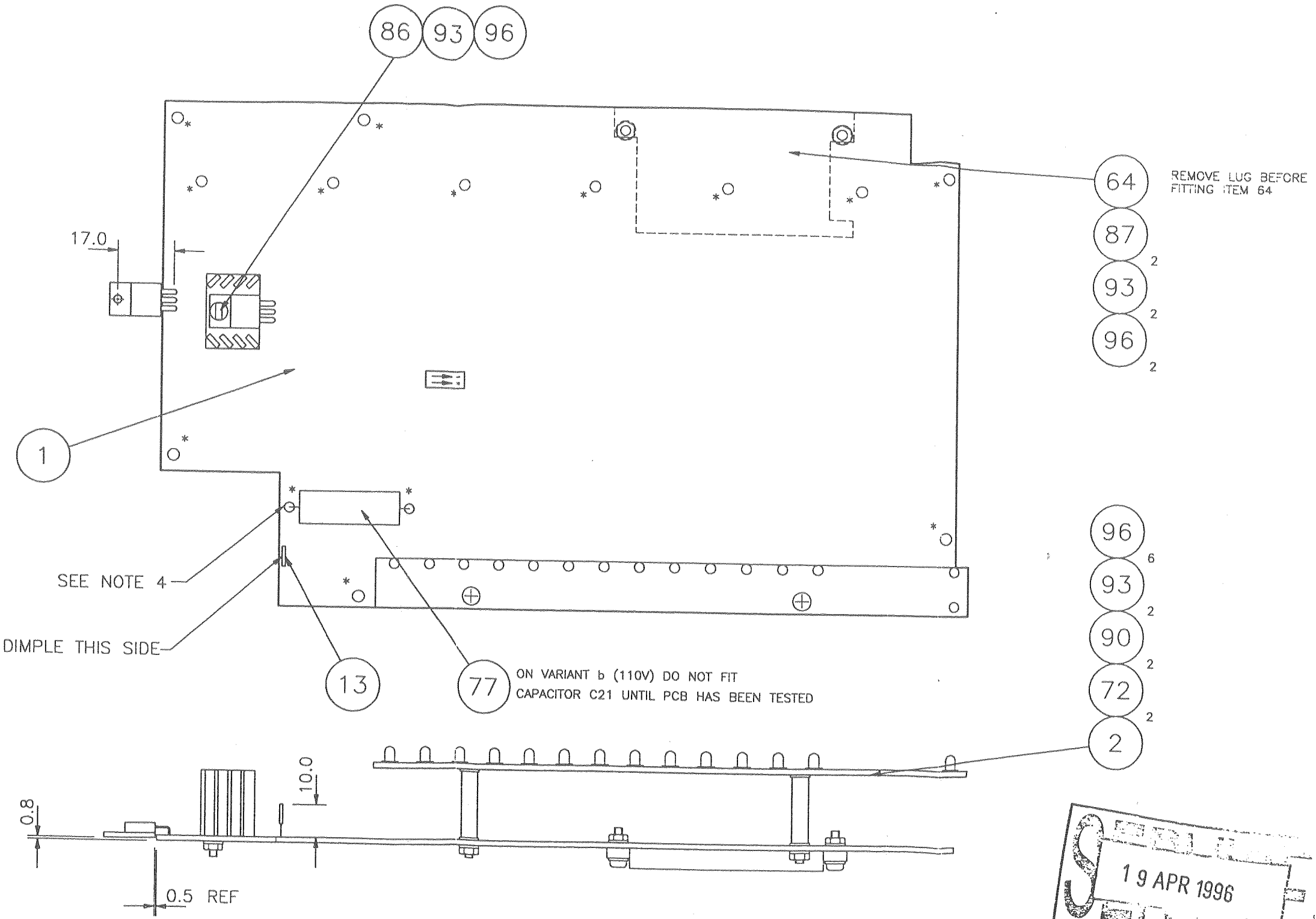

19 APR 1996

APPROVED	GEN TOL: X ± 0.5 X.X ± 0.2 X.XX ± 0.1 HOLES ± 0.05 ANGULAR ± 0.5 DEG UNLESS OTHERWISE STATED			DIMENSIONS:mm	SCALE: 1:1		
S.DOWNES	MATERIAL SEE ITEMS LIST	FINISH ------					
CHECKED D.NAPPER			12	16.1.96	5642	JM	
			11	15.12.95	5601	JL	
DRAWN D.NAPPER	THIS DRAWING IS THE COPYRIGHT OF DENLEY INST. LTD. COPIES IN WHOLE OR PART MUST NOT BE MADE WITHOUT THE WRITTEN CONSENT OF THE COMPANY. © 1996	TITLE CONTROL LOGIC PCB ASSEMBLY (12 WAY KEYPAD)	10	15.12.95	5508	JL	
			9	12.5.95	5423	JWH	
			ISS	DATE	ECN No.	CHK	ISS DATE ECN No. CHK

DENLEY BILLINGSH SUSSEX,EN RH14

SHEET	DEPT	DRAWING NUMBER
No. 1 OF 1	22	004/066A/B

DENLEY Billingshurst, Sussex RH14 9EY England

Item	Drawing No.	Description	Qty	Remarks
1	004/801	PCB	1	
2	004/325	LED SUPPORT	1	
3				
4				
5		INTERGRATED CIRCUITS		
6	000703065	MICRO PRO PD 8749 VERSION 4	1	IC1
7	000703017	IC 74 LS 165	4	IC2 TO IC5
8	000703018	IC 74 LS 374	2	IC7, IC20
9	000703019	IC 74 LS 04	1	IC9
10	000703021	7 WAY DARL DRIVER ULN 2003N	1	IC10
11	000703022	OPTO TRIAC DRIVER MOC 3041	3	IC11,12,13
12	000703023	IC 7404	1	IC8
13	000703030	HALL EFFECT IC UGN 3120U	1	IC14
14	000703066	IC 74 LS 125	1	IC22
15	000703067	IC 74 LS 139	1	IC21
16		CAPACITORS		
17	000101787	2.2 uF 35V SOLID TANTALUM	1	C3
18	000102702	10 uF 35V SOLID TANTALUM	1	C16
19	000104477	100 uF 16V ELECTROLITIC	1	C4
20	000103749	2200 uF 63V ELECTROLITIC	1	C61
21	000114424	0.47 uF 100V MIN LAYER	1	C6
22	000114418	0.22 uF 100V MIN LAYER	1	C5
23	000126124	22 pF 100V PLATE CERAMIC	2	C1, 2
24	000702009	0.1 uF 25V DISC CERAMIC	11	C7 TO C15, C20, C22
25	000702005	0.01 uF 400V POLYESTER	3	C17 TO C19
26	000702172	820 µF 100v SINGLE LAYER CERAMIC	5	C23 TO C27
27		RESISTORS CARBON FILM		
28	000131104	56R 0.25W	3	R1,2,3
29	000131132	100R 0.25W	4	R4,22,23,58
30	000131148	120R 0.25W	20	R5 TO R10, R46 TO R55, R71 TO R74
31	000131160	180R 0.25W	1	R56
32	000131176	220R 0.25W	1	R62
33	000131211	470R 0.25W	3	R11,12,13
34	000131227	560R 0.25W	1	R15
35	000131255	1K 0.25W	7	R16 TO R21, R57
36	000131334	4K7 0.25W	3	R24,61,75
37	000131378	10K 0.25W	6	R25, 26, R76 TO R79
38	000131457	47K 0.25W	2	R32, 38
39	000131520	180K 0.25W	2	R33, 34
40	000842769	82K 0.6W	1	R27
41	000842776	RESISTOR NETWORK 5X1K	1	RP4
42	000155352	CERAMIC W/W RESISTOR 4.7R 4W	1	R45
43	000305888	VOLTAGE REGULATOR uA 7805UC	1	REG1
44	000703015	VOLTAGE REG L78S12CV 12V 2A	1	REG2
45	000283255	HIGH SPEED SUPPRESSOR 6.8V	2	D1,2
46	000302198	QUARTZ CRYSTAL HC18U 6MHZ	1	XT1
47	000785008	TRIAC MAC 97-6	3	SCR1,2,3
48	000842011	RESISTOR NETWORK 8x47K	5	RP1,2,3,5,6
49	000262113	RECTIFIER KBL 02	1	REC1
50	000711010	SLOTTED OPTO LTH 301 (LITE - ON)	2	OSW1,2

19 APR 1996

Next Assembly: 004/051A

THIS DRAWING IS THE COPYRIGHT OF DENLEY INSTRUMENTS LTD. COPIES IN WHOLE OR PART MUST NOT BE MADE WITHOUT THE WRITTEN CONSENT OF THE COMPANY © 1996

ISS	DATE	ECN NO.	CHK	ISS	DATE	ECN NO.	CHK
10	16.1.96	5642	JL				
9	14.12.95	5601	JL				
8	14.12.95	5508	JL				

Drawn:	Checked:	Approved:	Title:	Sheet	Dept	I/L for Drg No.
D.Napper	J.Hazell	A.Partridge	CONTROL LOGIC PCB ASSEMBLY (12 WAY KEYPAD) 220-240v	No.1 of 2	22	004/066A

DENLEY Billingshurst, Sussex RH14 9EY England

Item	Drawing No.	Description	Qty	Remarks
51	000249794	AUD WARNING DEVICE EB 2209A-38C 12V	1	AWD1 (RS 249-794)
52	000848015	3mm LED YELLOW TELEFUNKEN THLY 4614	4	LD12, 13, 14, 16
53	000848013	3mm LED - GREEN CMD 5474 C	1	LD11
54	000848008	3mm LED - YELLOW CMD 5374 C	14	LD1 TO LD10, 17, LD18, 19, 20
55	000337598	KEYBOARD SWITCH - RED	1	SW9
56	000336696	2 WAY DIL SWITCH	1	DS1
57	000412403	FUSE T2A 250V BSI KITE MARKED	1	FS1
58	000412784	FUSE CLIPS	2	FS1
59	000713005	3 WAY CONNECTOR	1	PL1
60	000713013	4 WAY CONNECTOR	1	PL5
61				
62	000791008	2 WAY TERM BLOCK SMKD S3/2-5.08	3	TB1,2,4
63	000791009	3 WAY TERM BLOCK SMKD S3/3-5.08	1	TB3
64	000794004	CARD CONNECTOR	1	EC1
65	000730001	HEATSINK	1	FOR REG1
66	000794002	RIGHT-ANGLED HEADER (10 WAY)	10/36	PL7
67				
68				
69				
70	000401986	IC SOCKET (40 WAY)	1	
71	000848010	LED SPACER	4	FOR LD12, 13, 14, 16
72	000606771	SPACER 20mm	2	
73	000402181	TRANSISTOR PAD	3	FOR SCR1 TO 3
74	N3	FISH BEADS	8	FOR R45
75	000827005	RED HELSYN SLEEVE	17	
76				
77	000702003	CAPACITOR 0.091 µF 700V	1	C21
78				
79				
80	000399394	SILICONE SLEEVING 1mm BLACK	10mm	FIT TO C19
81				
82				
83				
84				
85				
86	000802049	SCREW M3 x 8 PAN HEAD POZI	1	
87	000802050	SCREW M3 x 10 PAN HEAD POZI	2	
88				
89				
90	000802259	SCREW M3 x 30 CSK HEAD POZI	2	
91				
92				
93	000803008	NUT M3 FULL HEX	5	
94				
95				
96	000804076	WASHER M3 WAVE	5	
97				
98				
99				
100				

SERIAL
19 APR 1996
SERIAL

Next Assembly: 004/061A

THIS DRAWING IS THE COPYRIGHT OF DENLEY INSTRUMENTS LTD. COPIES IN WHOLE OR PART MUST NOT BE MADE WITHOUT THE WRITTEN CONSENT OF THE COMPANY © 1996

ISS	DATE	ECN NO.	CHK	ISS	DATE	ECN NO.	CHK
6	16.1.96	5642	[illegible]				
5	14.12.95	5601	JL				
4	14.12.95	5508	JL				

Drawn:	Checked:	Approved:	Title:	Sheet	Dept	I/L for Drg No.
D.Napper	J.Hazell	A.Partridge	CONTROL LOGIC PCB ASSEMBLY (12 WAY KEYPAD) 220-240v	No.2 of 2	22	004/066A

DENLEY Billingshurst, Sussex RH14 9EY England

Item	Drawing No.	Description	Qty	Remarks
1	004/801	PCB	1	
2	004/325	LED SUPPORT	1	
3				
4				
5		INTERGRATED CIRCUITS		
6	000703065	MICRO PRO PD 8749 VERSION 4	1	IC1
7	000703017	IC 74 LS 165	4	IC2 TO IC5
8	000703018	IC 74 LS 374	2	IC7, IC20
9	000703019	IC 74 LS 04	1	IC9
10	000703021	7 WAY DARL DRIVER ULN 2003N	1	IC10
11	000703022	OPTO TRIAC DRIVER MOC 3041	3	IC11,12,13
12	000703023	IC 7404	1	IC8
13	000703030	HALL EFFECT IC UGN 3120U	1	IC14
14	000703066	IC 74 LS 125	1	IC22
15	000703067	IC 74 LS 139	1	IC21
16		CAPACITORS		
17	000101787	2.2 uF 35V SOLID TANTALUM	1	C3
18	000102702	10 uF 35V SOLID TANTALUM	1	C16
19	000104477	100 uF 16V ELECTROLITIC	1	C4
20	000103749	2200 uF 63V ELECTROLITIC	1	C61
21	000114424	0.47 uF 100V MIN LAYER	1	C6
22	000114418	0.22 uF 100V MIN LAYER	1	C5
23	000126124	22 pF 100V PLATE CERAMIC	2	C1, 2
24	000702009	0.1 uF 25V DISC CERAMIC	11	C7 TO C15, C20, C22
25	000702005	0.01 uF 400V POLYESTER	3	C17 TO C19
26	000702172	820 µF 100v SINGLE LAYER CERAMIC	5	C23 TO C27
27		RESISTORS-CARBON FILM		
28	000131104	56R 0.25W	3	R1,2,3
29	000131132	100R 0.25W	4	R4,22,23,58
30	000131148	120R 0.25W	20	R5 TO R10, R46 TO R55, R71 TO R74
31	000131160	180R 0.25W	1	R56
32	000131176	220R 0.25W	1	R62
33	000131211	470R 0.25W	3	R11,12,13
34	000131227	560R 0.25W	1	R15
35	000131255	1K 0.25W	7	R16 TO R21, R57
36	000131334	4K7 0.25W	3	R24,61,75
37	000131378	10K 0.25W	6	R25, 26, R76 TO R79
38	000131457	47K 0.25W	2	R32, 38
39	000131520	180K 0.25W	2	R33, 34
40	000842769	82K 0.6W	1	R27
41	000842776	RESISTOR NETWORK 5X1K	1	RP4
42	000155352	CERAMIC W/W RESISTOR 4.7R 4W	1	R45
43	000305888	VOLTAGE REGULATOR uA 7805UC	1	REG1
44	000703015	VOLTAGE REG L78S12CV 12V 2A	1	REG2
45	000283255	HIGH SPEED SUPPRESSOR 6.8V	2	D1,2
46	000302198	QUARTZ CRYSTAL HC18U 6MHZ	1	XT1
47	000785008	TRIAC MAC 97-6	3	SCR1,2,3
48	000842011	RESISTOR NETWORK 8x47K	5	RP1,2,3,5,6
49	000262113	RECTIFIER KBL 02	1	REC1
50	000711010	SLOTTED OPTO LTH 301 (LITE - ON)	2	OSW1,2

19 APR 1996

Next Assembly: 004/051B

THIS DRAWING IS THE COPYRIGHT OF DENLEY INSTRUMENTS LTD. COPIES IN WHOLE OR PART MUST NOT BE MADE WITHOUT THE WRITTEN CONSENT OF THE COMPANY © 1996

ISS	DATE	ECN NO	CHK	ISS	DATE	ECN NO	CHK
9	16.1.96	5642					
8	14.12.95	5601	JK				

Drawn:	Checked:	Approved:	Title:	Sheet	Dept	I/L for Drg No.
D.Napper	J.Hazell	A.Partridge	CONTROL LOGIC PCB ASSEMBLY (12 WAY KEYPAD) 110-120v	No.1 of 2	22	004/066B

DENLEY Billingshurst, Sussex RH14 9EY England

Item	Drawing No.	Description	Qty	Remarks
51	000249794	AUD WARNING DEVICE EB 2209A-38C 12V	1	AWD1 (RS 249-794)
52	000848015	3mm LED YELLOW TELEFUNKEN THLY 4614	4	LD12, 13, 14, 16
53	000848013	3mm LED - GREEN CMD 5474 C	1	LD11
54	000848008	3mm LED - YELLOW CMD 5374 C	14	LD1 TO LD10, 17, LD18, 19, 20
55	000337598	KEYBOARD SWITCH - RED	1	SW9
56	000336696	2 WAY DIL SWITCH	1	DS1
57	000716005	FUSE T2A 250V UL CSA 239	1	FS1
58	000412784	FUSE CLIPS	2	FS1
59	000713005	3 WAY CONNECTOR	1	PL1
60	000713013	4 WAY CONNECTOR	1	PL5
61				
62	000791008	2 WAY TERM BLOCK SMKD S3/2-5.08	3	TB1,2,4
63	000791009	3 WAY TERM BLOCK SMKD S3/3-5.08	1	TB3
64	000794004	CARD CONNECTOR	1	EC1
65	000730001	HEATSINK	1	FOR REG1
66	000794002	RIGHT-ANGLED HEADER (10 WAY)	10/36	PL7
67				
68				
69				
70	000401986	IC SOCKET (40 WAY)	1	
71	000848010	LED SPACER	4	FOR LD12, 13, 14, 16
72	000606771	SPACER 20mm	2	
73	000402181	TRANSISTOR PAD	3	FOR SCR1 TO 3
74	N3	FISH BEADS	8	FOR R45
75	000827005	RED HELSYN SLEEVE	17	
76				
77	000702010	CAPACITOR 0.39 µF 300V	1	C21
78		NOTE:		
79		TEST PCB BEFORE FITTING C21		
80	000399394	SILICONE SLEEVING 1mm BLACK	10mm	FIT TO C19
81				
82				
83				
84				
85				
86	000802049	SCREW M3 x 8 PAN HEAD POZI	1	
87	000802050	SCREW M3 x 10 PAN HEAD POZI	2	
88				
89				
90	000802259	SCREW M3 x 30 CSK HEAD POZI	2	
91				
92				
93	000803008	NUT M3 FULL HEX	5	
94				
95				
96	000804076	WASHER M3 WAVE	5	
97				
98				
99				
100				

19 APR 1996

Next Assembly: 004/051B								
THIS DRAWING IS THE COPYRIGHT OF DENLEY INSTRUMENTS LTD. COPIES IN WHOLE OR PART MUST NOT BE MADE WITHOUT THE WRITTEN CONSENT OF THE COMPANY © 1996	4	16.1.96	5642					
	3	14.12.95	5601	JL				
	ISS	DATE	ECN NO.	CHK	ISS	DATE	ECN NO.	CHK

Drawn:	Checked:	Approved:	Title:	Sheet	Dept	I/L for Drg No.
D.Napper	J.Hazell	A.Partridge	CONTROL LOGIC PCB ASSEMBLY (12 WAY KEYPAD) 110-120v	No.2 of 2	22	004/066B

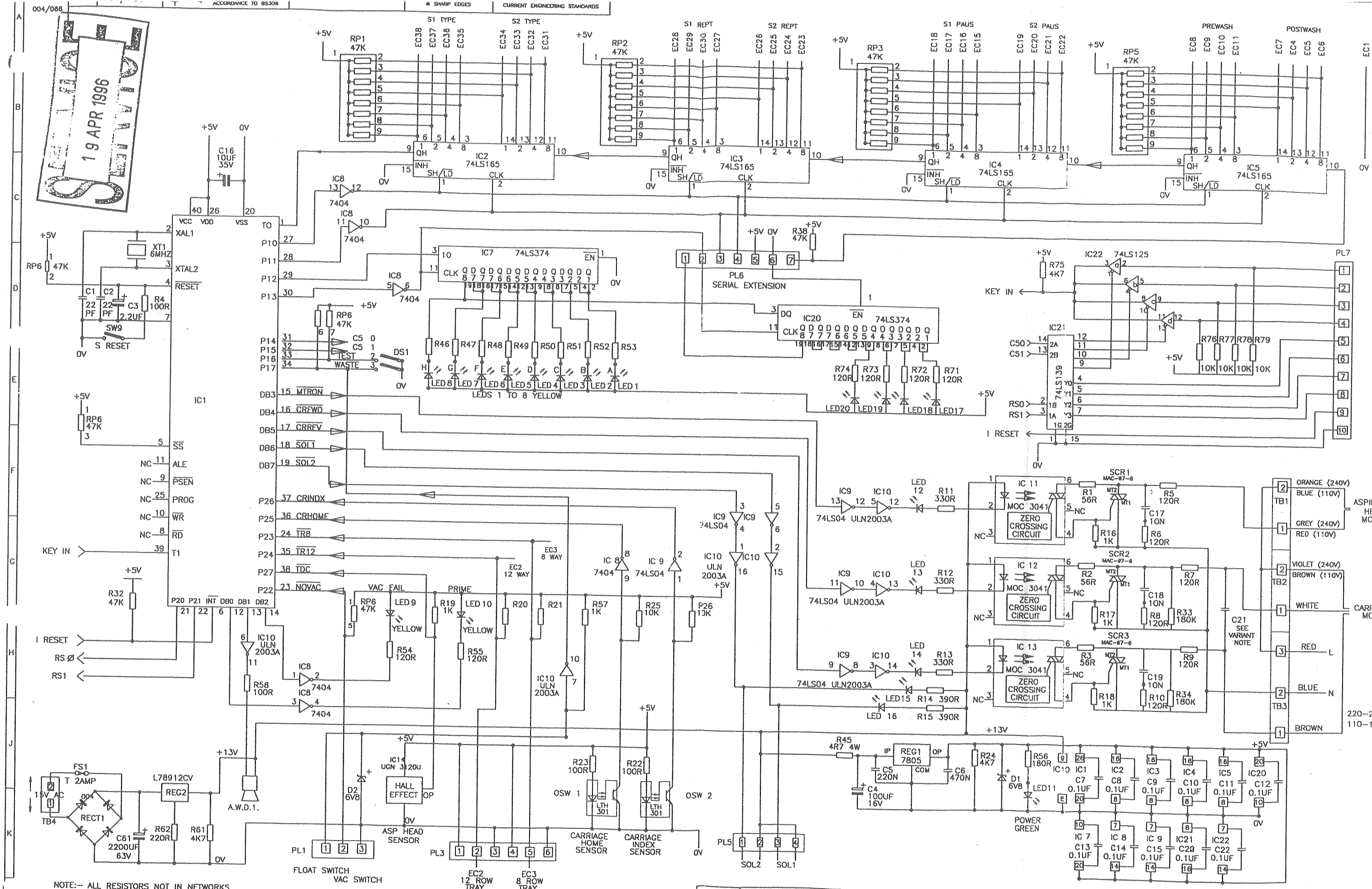

NOTE:– ALL RESISTORS NOT IN NETWORKS ARE 0.25W ±5% CARBON FILM (EXCEPTING R45)

VARIANT:– C21 IS 0.090 uF 700V FOR 220–240V UNITS AND 0.39 uF 300V FOR 110–120V UNITS

APPROVED P.JUPP	GEN TOL: X ± 0.5 X.X ± 0.2 X.XX ± 0.1 HOLES ± 0.05 ANGULAR ± 0.5 DEG UNLESS OTHERWISE STATED	DIMENSIONS:mm	SCALE: NTS
CHECKED D.NAPPER	MATERIAL ------	FINISH ------	DENLEY BILLINGS SUSSEX RH1
DRAWN W.CROWDER	THIS DRAWING IS THE COPYRIGHT OF DENLEY INST. LTD. COPIES IN WHOLE OR PART MUST NOT BE MADE WITHOUT THE WRITTEN CONSENT OF THE COMPANY. © 1996	TITLE PLATE WASHER (MK4) CONTROL & DRIVE CIRCUIT	SHEET No. 1 OF 1 · DEPT 22 · DRAWING NUMBER 004/701*

ISS	DATE	ECN No.	CHK	ISS	DATE	ECN No.	CHK
5	18.4.92	1920					
4	8.1.92	1297					
3	11.3.91	1017					
2	31.1.90	825					
1	10.3.88	------					

22	004/750A/C/E	ACCORDANCE TO BS308		& SHARP EDGES	CURRENT ENGINEERING STANDARDS

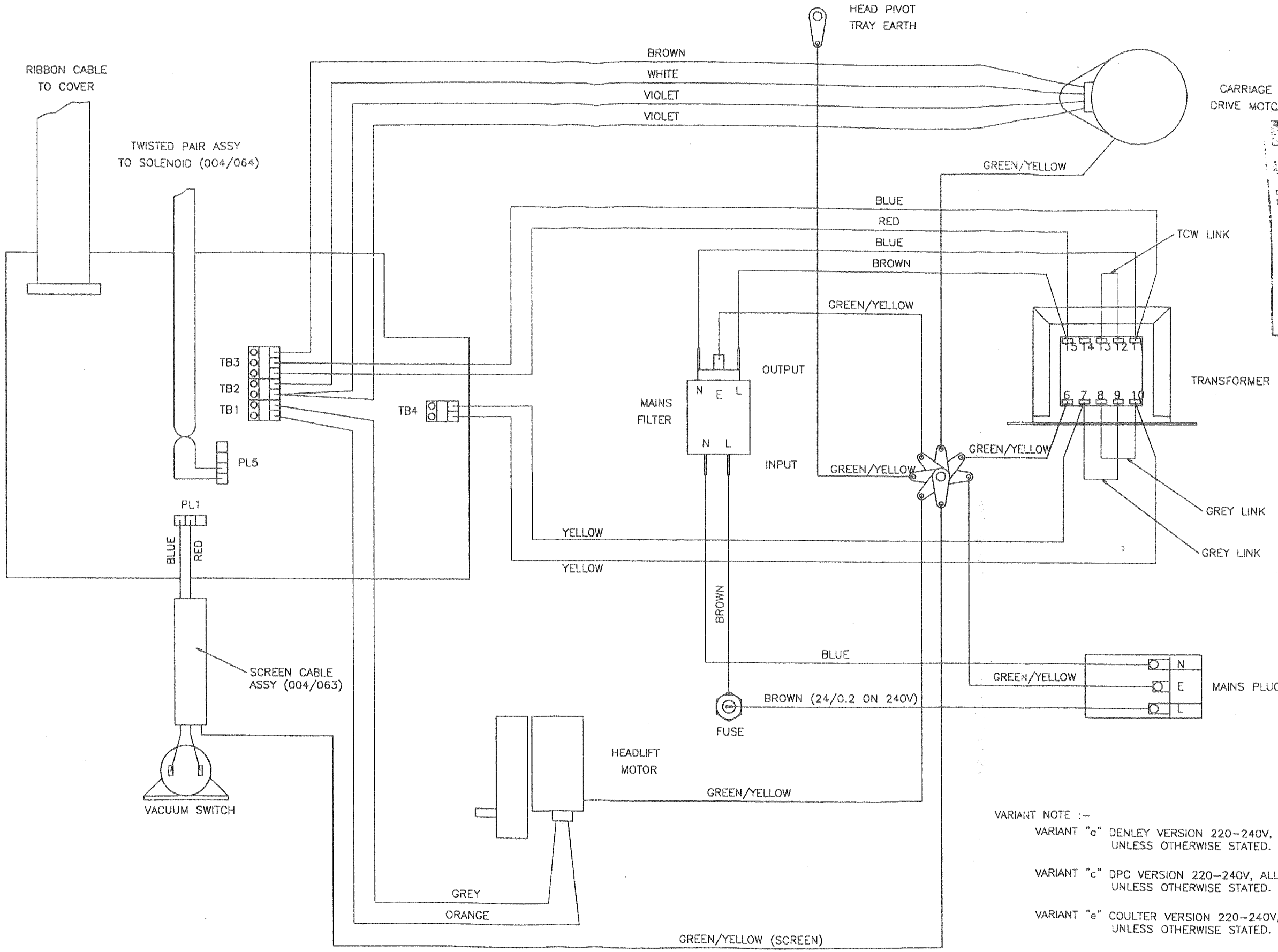

VARIANT NOTE :-

VARIANT "a" DENLEY VERSION 220-240V, ALL WIRE 16/0.2 UNLESS OTHERWISE STATED.

VARIANT "c" DPC VERSION 220-240V, ALL WIRE 16/0.2 UNLESS OTHERWISE STATED.

VARIANT "e" COULTER VERSION 220-240V, ALL WIRE 16/0.2 UNLESS OTHERWISE STATED.

19 APR 1996

APPROVED S.DOWNES	GEN TOL: X ± 0.5 X.X ± 0.2 X.XX ± 0.1 HOLES ± 0.05 ANGULAR ± 0.5 DEG UNLESS OTHERWISE STATED			DIMENSIONS:mm			SCALE: NTS			DENLEY BILLIN SUSSE R
CHECKED D.RODERICK	MATERIAL ------	FINISH ------								
DRAWN D.NAPPER	THIS DRAWING IS THE COPYRIGHT OF DENLEY INST. LTD. COPIES IN WHOLE OR PART MUST NOT BE MADE WITHOUT THE WRITTEN CONSENT OF THE COMPANY. © 1995	TITLE WELLWASH 4 WASHER UNIT WIRING DIAGRAM	7	29.6.95	5285	JWH				SHEET No. 1 OF 1 / DEPT 22 / DRAWING NUMBE 004/750A/C/
			ISS	DATE	ECN No.	CHK	ISS	DATE	ECN No.	CHK

004	22	004/751*	PROJECTION	IF IN DOUBT : ASK	& SHARP EDGES	CURRENT ENGINEERING STANDARDS

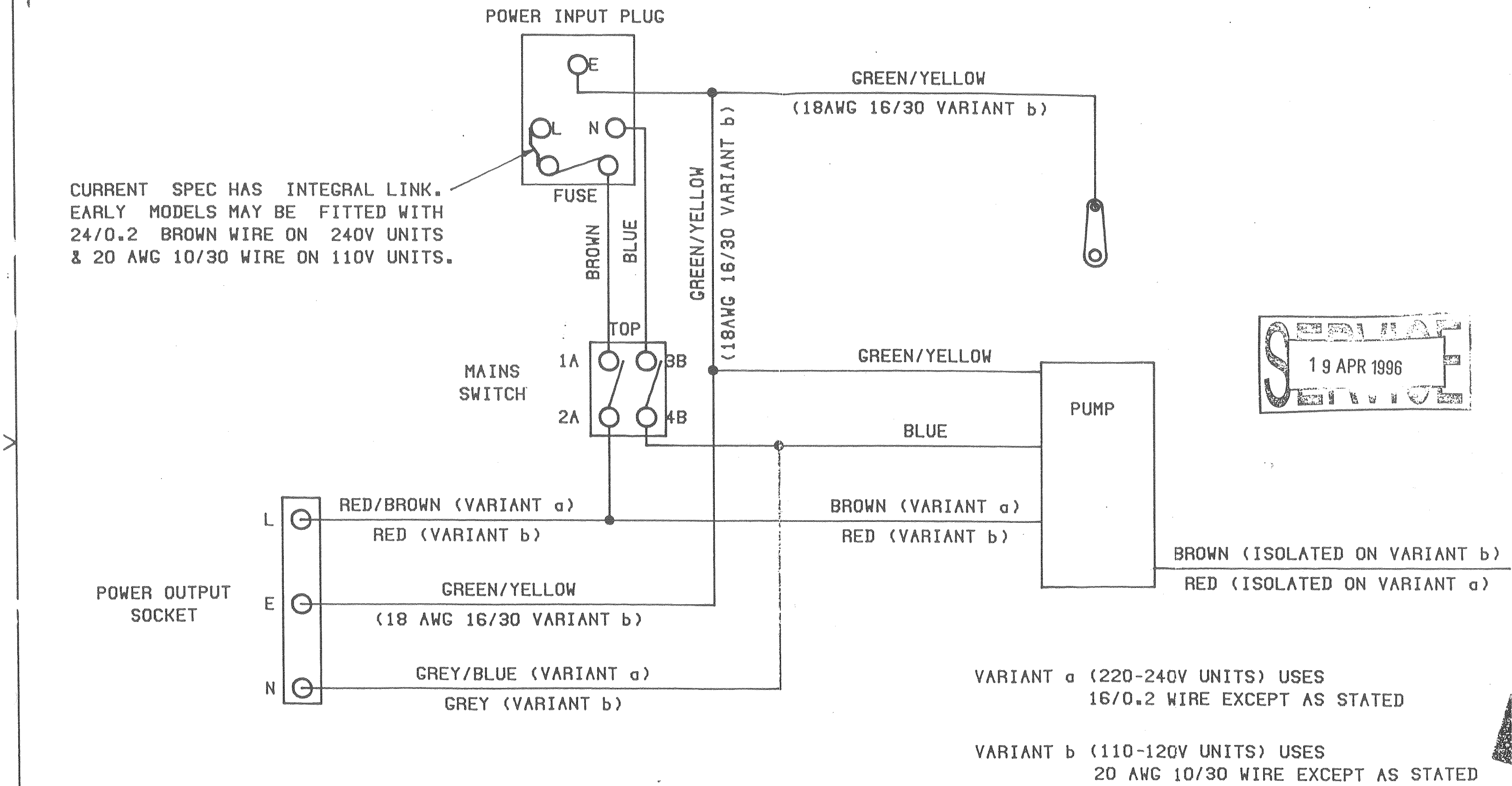

SERVICE 19 APR 1996

APPROVED PB JUPP	GEN TOL: X +/- 0.5 X.X +/-0.2 X.XX +/-0.1 ANGULAR +/-0.5 DEG UNLESS OTHERWISE STATED			DIMENSIONS:mm		SCALE: NTS					
CHECKED JH	MATERIAL ------	FINISH ------	5	20.1.92	1648						
			4	20.1.92	958						
			3	1.6.88	564	—					
DRAWN DN	THIS DRAWING IS THE COPYRIGHT OF DENLEY INST. LTD. COPIES IN WHOLE OR PART MUST NOT BE MADE WITHOUT THE WRITTEN CONSENT OF THE COMPANY. © 1988	TITLE PUMP UNIT WIRING DIAGRAM	2	12.10.87	471	—					
			1	1.6.88	------	—					
			ISS	DATE	ECO No.	CHK	ISS	DATE	ECO No.	CHK	

DENLEY

BILLINGSHUR
SUSSEX, ENGL
RH14 9EY

SHEET	DEPT	DRAWING NUMBER
No. 1 OF 1	22	004/751*

A MEMBER OF THE FII GROU

22	004/752	ACCORDANCE TO BS308		& SHARP EDGES	CURRENT ENGINEERING STANDARDS

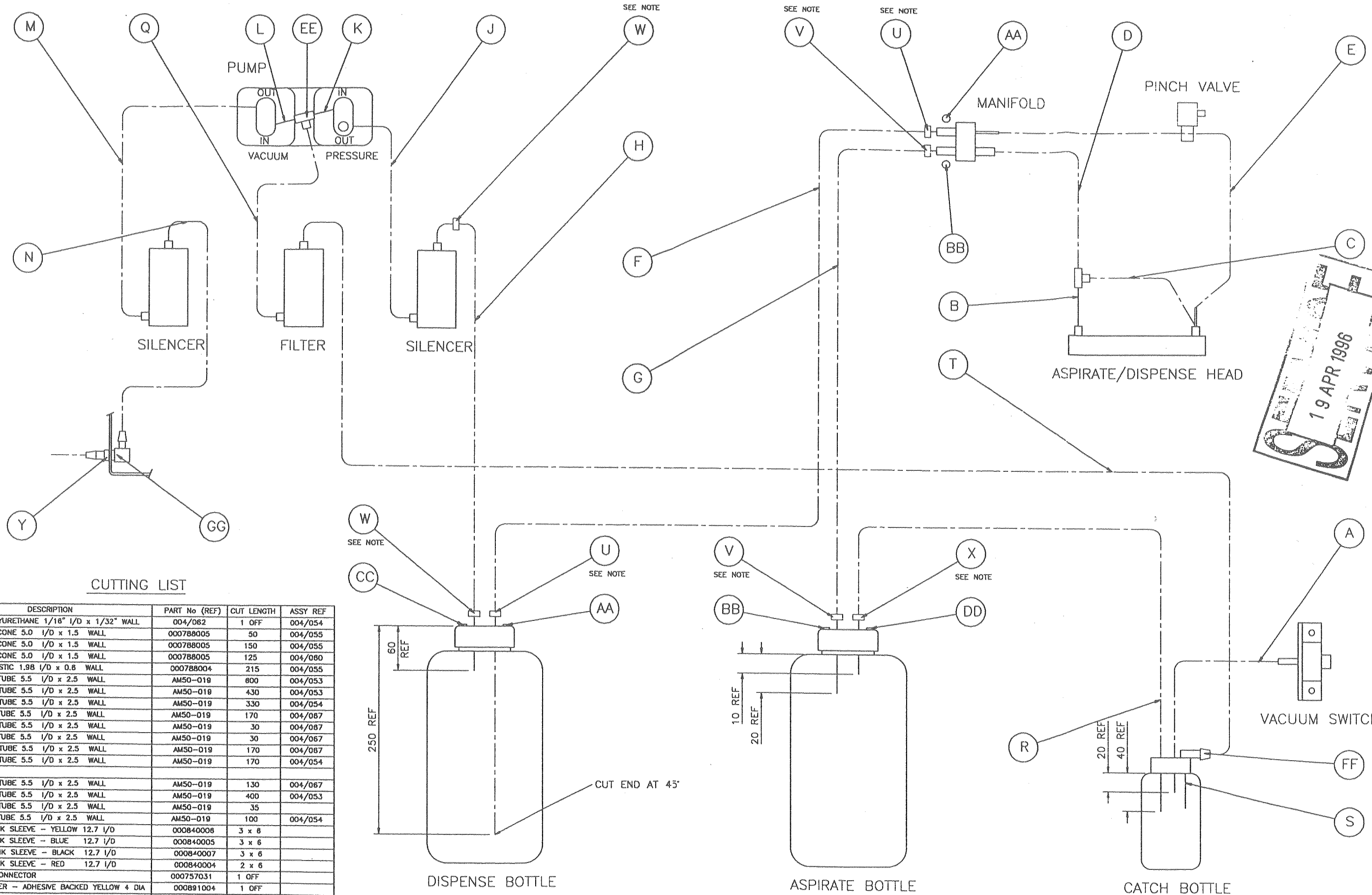

FOR SORIN PLUMBING SEE 004/753

CUTTING LIST

REF	DESCRIPTION	PART No (REF)	CUT LENGTH	ASSY REF
A	TUBE POLYURETHANE 1/16" I/D x 1/32" WALL	004/062	1 OFF	004/054
B	TUBE SILICONE 5.0 I/D x 1.5 WALL	000788005	50	004/055
C	TUBE SILICONE 5.0 I/D x 1.5 WALL	000788005	150	004/055
D	TUBE SILICONE 5.0 I/D x 1.5 WALL	000788005	125	004/080
E	TUBE SILASTIC 1.98 I/D x 0.8 WALL	000788004	215	004/055
F	SILICONE TUBE 5.5 I/D x 2.5 WALL	AM50-019	600	004/053
G	SILICONE TUBE 5.5 I/D x 2.5 WALL	AM50-019	430	004/053
H	SILICONE TUBE 5.5 I/D x 2.5 WALL	AM50-019	330	004/054
J	SILICONE TUBE 5.5 I/D x 2.5 WALL	AM50-019	170	004/067
K	SILICONE TUBE 5.5 I/D x 2.5 WALL	AM50-019	30	004/067
L	SILICONE TUBE 5.5 I/D x 2.5 WALL	AM50-019	30	004/067
M	SILICONE TUBE 5.5 I/D x 2.5 WALL	AM50-019	170	004/067
N	SILICONE TUBE 5.5 I/D x 2.5 WALL	AM50-019	170	004/054
P				
Q	SILICONE TUBE 5.5 I/D x 2.5 WALL	AM50-019	130	004/067
R	SILICONE TUBE 5.5 I/D x 2.5 WALL	AM50-019	400	004/053
S	SILICONE TUBE 5.5 I/D x 2.5 WALL	AM50-019	35	
T	SILICONE TUBE 5.5 I/D x 2.5 WALL	AM50-019	100	004/054
U	HEATSHRINK SLEEVE - YELLOW 12.7 I/D	000840008	3 x 6	
V	HEATSHRINK SLEEVE - BLUE 12.7 I/D	000840005	3 x 6	
W	HEATSHRINK SLEEVE - BLACK 12.7 I/D	000840007	3 x 6	
X	HEATSHRINK SLEEVE - RED 12.7 I/D	000840004	2 x 6	
Y	BARBED CONNECTOR	000757031	1 OFF	
AA	DOT MARKER - ADHESIVE BACKED YELLOW 4 DIA	000891004	1 OFF	
BB	DOT MARKER - ADHESIVE BACKED BLUE 4 DIA	000891003	1 OFF	
CC	DOT MARKER - ADHESIVE BACKED BLACK 4 DIA	000891006	1 OFF	
DD	DOT MARKER - ADHESIVE BACKED RED 4 DIA	000891005	1 OFF	
EE	TEE PIECE	000757003	1 OFF	
FF	MODIFIED ELBOW	004/330	1 OFF	
GG	ELBOW CONNECTOR	000757017	1 OFF	

NOTE:-
COLOUR MARKERS FITTED TO TUBING TO BO POSITIONED 20mm FROM TUBE ENDS EXCEPT AT BOTTLE CAPS, WHERE MARKER IS TO BUTT UP AGAINST CAP. COLOUR OF TUBE MARKER IS TO MATCH COLOURED DOT ON CAP WHEN ASSEMBLED.

APPROVED S.DOWNES	GEN TOL: X ± 0.5 X.X ± 0.2 X.XX ± 0.1 HOLES ± 0.05 ANGULAR ± 0.5 DEG UNLESS OTHERWISE STATED							DIMENSIONS:mm			SCALE: NTS			DENLEY BILLI SUSS
CHECKED A.PARTRIDGE	MATERIAL ----------	FINISH ----------												
			17	1.4.96	5679	PB								
DRAWN D.NAPPER	THIS DRAWING IS THE COPYRIGHT OF DENLEY INST. LTD. COPIES IN WHOLE OR PART MUST NOT BE MADE WITHOUT THE WRITTEN CONSENT OF THE COMPANY. © 1995	TITLE PLUMBING DIAGRAM DENLEY WASHER	16	22.12.95	5565	GF							SHEET No. 1 OF 1	DEPT 22	DRAWING NUME 004/752
			15	22.12.95	5458	GF								
			ISS	DATE	ECN No.	CHK	ISS	DATE	ECN No.	CHK				

19 APR 1996

NEXT ASSY	DEPT	DRAWING NUMBER				
WW 006	22	006/701	THIRD ANGLE PROJECTION ... PREPAR... ACCORDANCE TO ...	IF IN DOUBT : ASK	REMOVE ALL BURRS & SHARP EDGES	WORK TO CC... WITH C... ENGINEERING STANDARDS

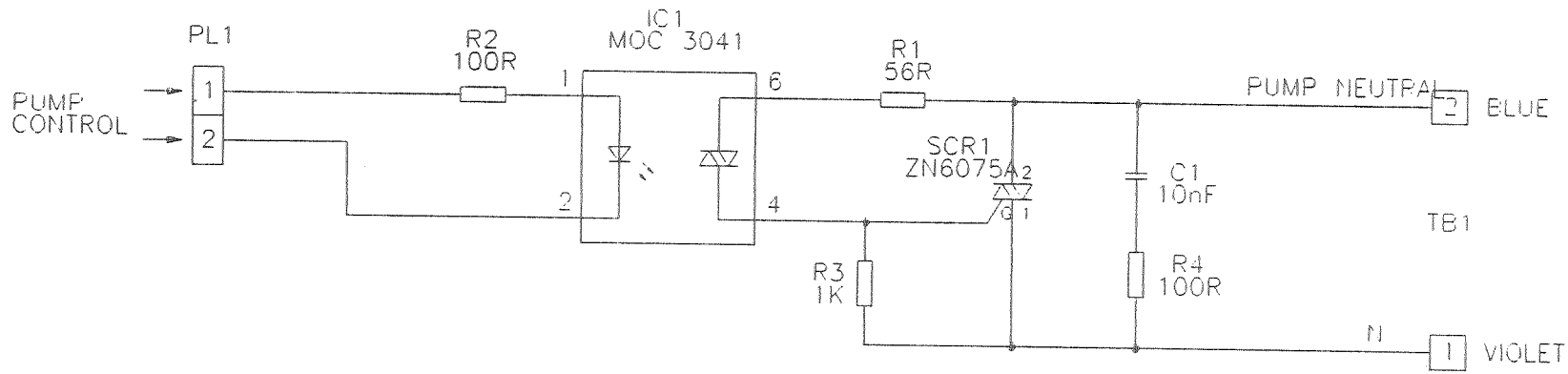

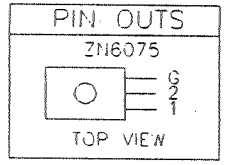

SERVICE
19 APR 1996

APPROVED	GEN TOL: X ? 0.5 X.X ? 0.2 X.XX ? 0.1 HOLES ? 0.05 ANGULAR ? 0.5 DEG UNLESS OTHERWISE STATED	DIMENSIONS:mm	SCALE: NTS	DENLEY BILLINGSHURST, SUSSEX, ENGLAND. RH14 9EY
R.COUPE	MATERIAL ------	FINISH ------		
CHECKED D.NAPPER				
DRAWN A.PARTRIDGE	THIS DRAWING IS THE COPYRIGHT OF DENLEY INST LTD COPIES IN WHOLE OR PART MUST NOT BE MADE WITHOUT THE WRITTEN CONSENT OF THE COMPANY. © 1995	TITLE WELLWASH 4 MK2 PUMP CONTROL CIRCUIT DIAGRAM		SHEET No. 1 OF 1 / DEPT 22 / DRAWING NUMBER 006/701 / A3

ISS	DATE	ECN No.	CHK	ISS	DATE	ECN No.	CHK
1	21.1.91	1151					

NEXT ASS.	DEPT	DRAWING NUMBER					
006	22	006/751A	THIRD ANGLE PROJECTION DRAWING PREPARED IN ACCORDANCE TO BS308	IF IN DOUBT : ASK	REMOVE ALL BURRS & SHARP EDGES	WORK TO COMPLY WITH CURRENT ENGINEERING STANDARDS	

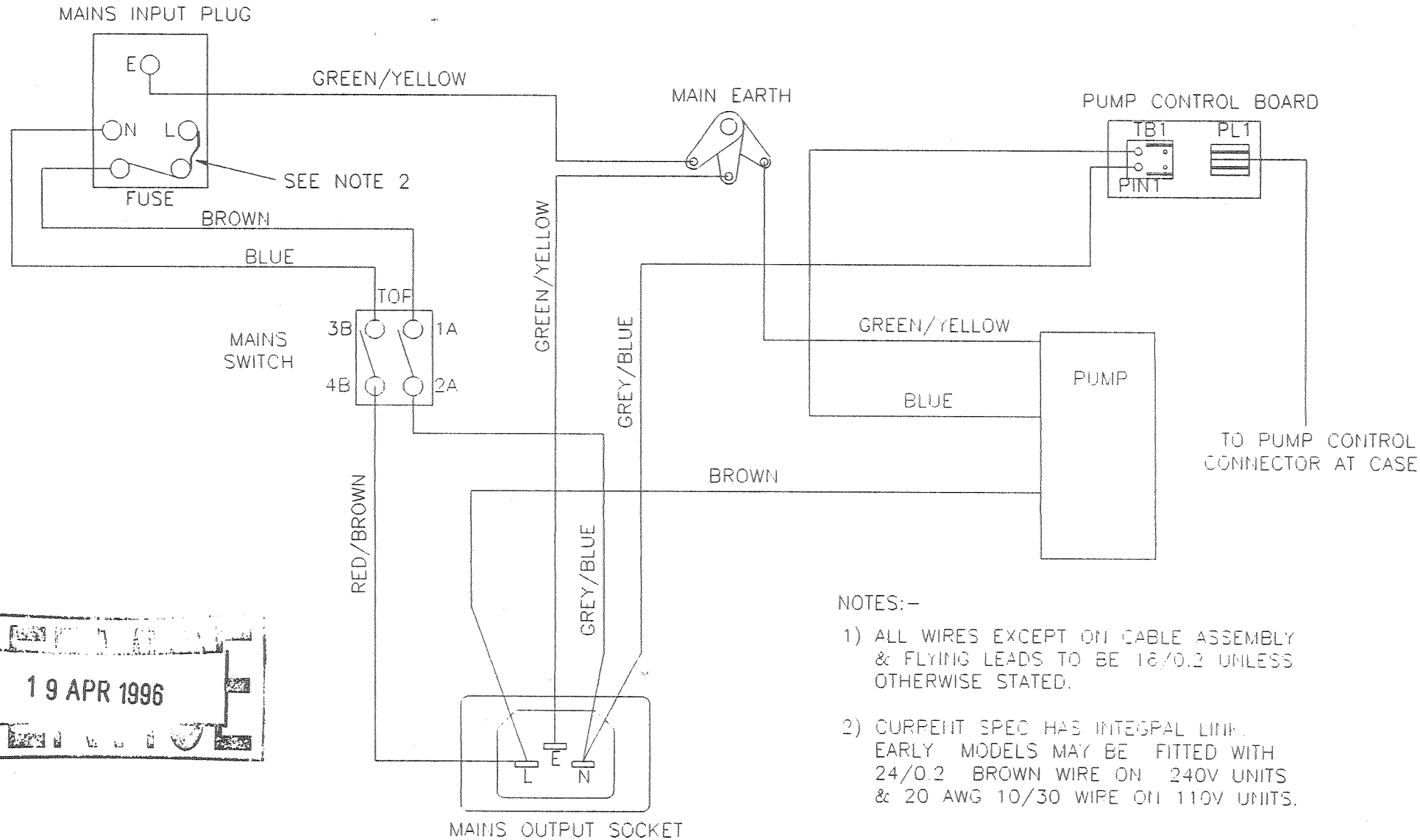

NOTES:-

1) ALL WIRES EXCEPT ON CABLE ASSEMBLY & FLYING LEADS TO BE 16/0.2 UNLESS OTHERWISE STATED.

2) CURRENT SPEC HAS INTEGRAL LINE. EARLY MODELS MAY BE FITTED WITH 24/0.2 BROWN WIRE ON 240V UNITS & 20 AWG 10/30 WIRE ON 110V UNITS.

19 APR 1996

APPROVED	GEN TOL: X ? 0.5 XX ? 0.2 X.XX ? 0.1 HOLES ? 0.05 ANGULAR ? 0.5 DEG UNLESS OTHERWISE STATED		DIMENSIONS:mm	SCALE: NTS	DENLEY BILLINGSHURST, SUSSEX, ENGLAND. RH14 9EY
J.HAMILTON	MATERIAL -----	FINISH -----			
CHECKED D.NAPPER			3 14.2.96 5100		
DRAWN A.PARTRIDGE	THIS DRAWING IS THE COPYRIGHT OF DENLEY INST. LTD. COPIES IN WHOLE OR PART MUST NOT BE MADE WITHOUT THE WRITTEN CONSENT OF THE COMPANY. © 1995	TITLE WELLWASH 4 MK2 PUMP UNIT WIRING DIAGRAM (220-240V 50HZ)	2 23.1.92 1648 DR 1 18.2.91 ---- -- ISS DATE ECN No. CHK ISS DATE ECN No. CHK	SHEET No. 1 OF 1	DEPT 22 / DRAWING NUMBER 006/751A / A3

NEXT ASSY 006 | DRAWING NUMBER CC 750A | THIRD ANGLE PROJECTION DRAWING PREPARED IN ACCORDANCE TO BS308 | IF IN DOUBT ASK | REMOVE ALL BURRS & SHARP EDGES | WORK TO COMPLY WITH J.I. ENGINEERING STANDARDS

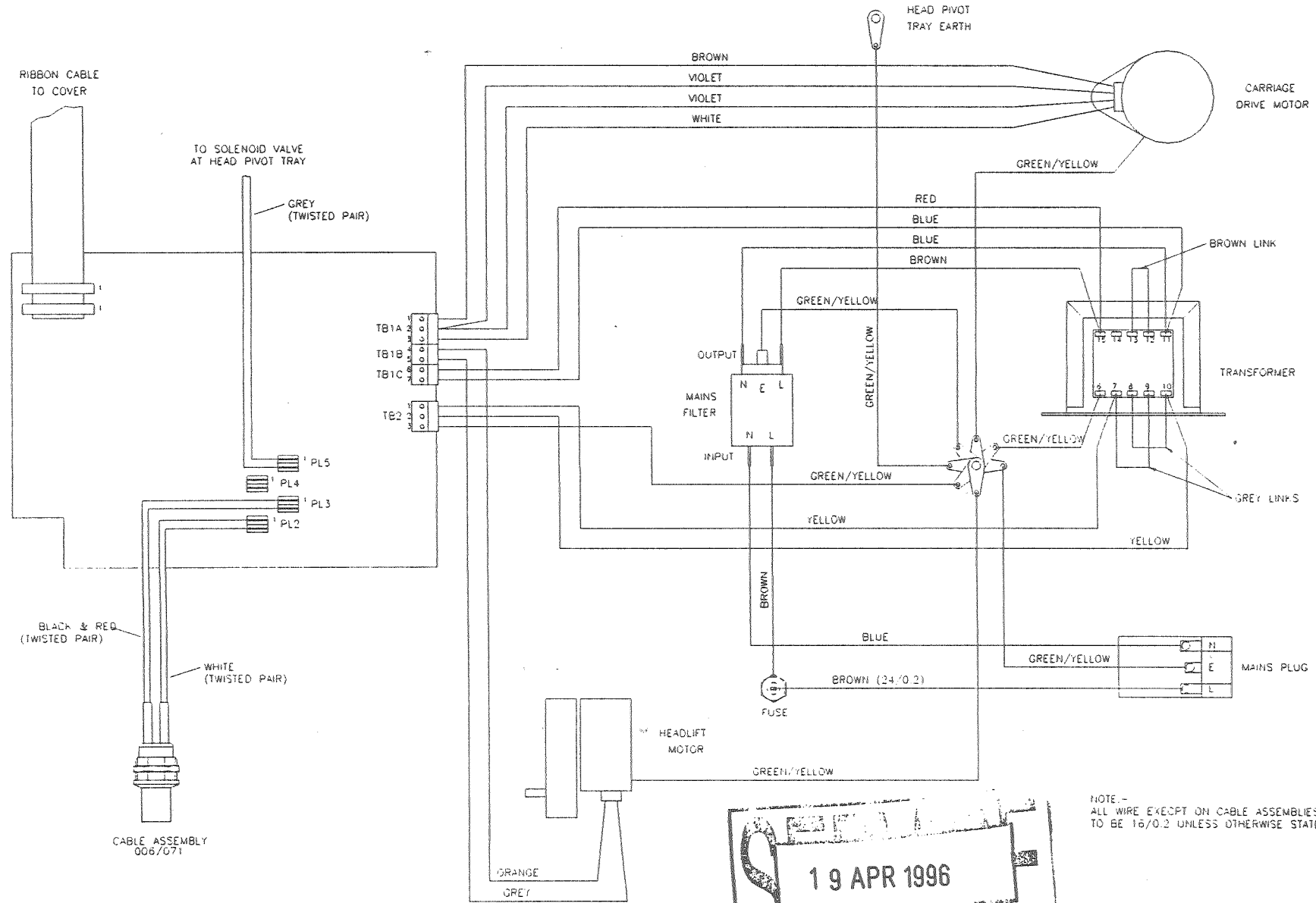

NOTE.-
ALL WIRE EXCEPT ON CABLE ASSEMBLIES & FLYING LEADS TO BE 16/0.2 UNLESS OTHERWISE STATED.

19 APR 1996

APPROVED	GEN TOL: ±.7 ±.05 ±.X ±.02 ±.XX ±.01 HOLES ±.005 ANGULAR ±.25 DEC UNLESS OTHERWISE STATED	DIMENSIONS mm	SCALE: NTS	DENLEY BILLINGSHURST SUSSEX ENGLAND
CHECKED	MATERIAL ------ FINISH ------			
DRAWN A.PARSHADE	THIS DRAWING IS THE COPYRIGHT OF DENLEY INST LTD COPIES IN WHOLE OR PART MUST NOT BE MADE WITHOUT THE WRITTEN CONSENT OF THE COMPANY (C) 1995	TITLE WELLWASH & MILD WASHER UNIT WIRING DIAGRAM (200-240V 50HZ)	2 17.7.96 S.D.S. 1 31.3.94 J.D.B. J.WH.	SHEET 1 OF 1 DEPT 22 DRAWING NUMBER 208/750A A1

22	006/752	ACCORDANCE TO BS308	IF IN DOUBT : ASK	& SHARP EDGES	ALL WORK TO COMPLY WITH CURRENT ENGINEERING STANDARDS

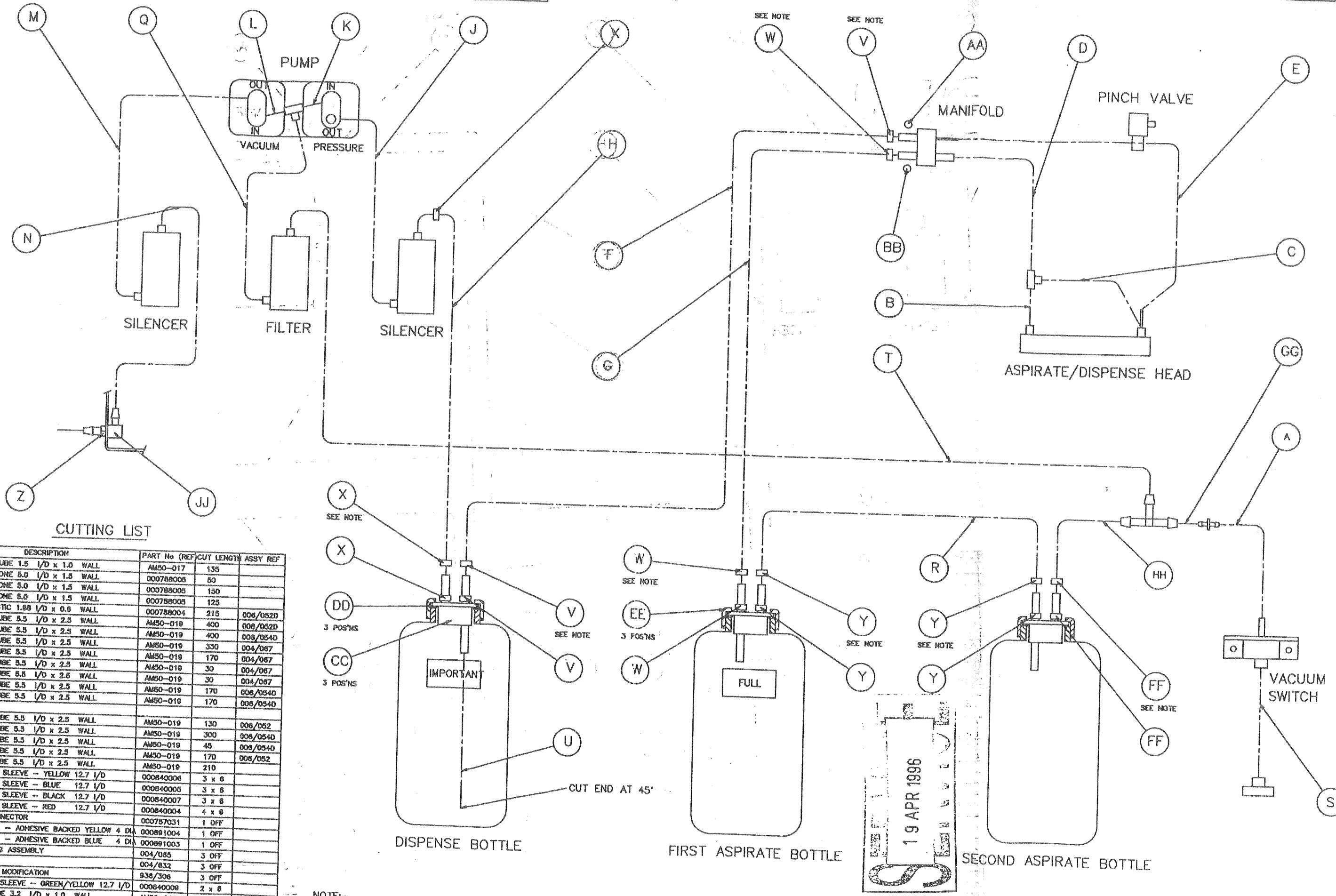

CUTTING LIST

REF	DESCRIPTION	PART No (REF)	CUT LENGTH	ASSY REF
A	SILICONE TUBE 1.5 I/D x 1.0 WALL	AM50-017	135	
B	TUBE SILICONE 5.0 I/D x 1.5 WALL	000788005	50	
C	TUBE SILICONE 5.0 I/D x 1.5 WALL	000788005	150	
D	TUBE SILICONE 5.0 I/D x 1.5 WALL	000788005	125	
E	TUBE SILASTIC 1.96 I/D x 0.6 WALL	000788004	215	006/052D
F	SILICONE TUBE 5.5 I/D x 2.5 WALL	AM50-019	400	006/052D
G	SILICONE TUBE 5.5 I/D x 2.5 WALL	AM50-019	400	006/054D
H	SILICONE TUBE 5.5 I/D x 2.5 WALL	AM50-019	330	004/067
J	SILICONE TUBE 5.5 I/D x 2.5 WALL	AM50-019	170	004/067
K	SILICONE TUBE 5.5 I/D x 2.5 WALL	AM50-019	30	004/067
L	SILICONE TUBE 5.5 I/D x 2.5 WALL	AM50-019	30	004/067
M	SILICONE TUBE 5.5 I/D x 2.5 WALL	AM50-019	170	006/054D
N	SILICONE TUBE 5.5 I/D x 2.5 WALL	AM50-019	170	006/054D
P				
Q	SILICONE TUBE 5.5 I/D x 2.5 WALL	AM50-019	130	006/052
R	SILICONE TUBE 5.5 I/D x 2.5 WALL	AM50-019	300	006/054D
S	SILICONE TUBE 5.5 I/D x 2.5 WALL	AM50-019	45	006/054D
T	SILICONE TUBE 5.5 I/D x 2.5 WALL	AM50-019	170	006/052
U	SILICONE TUBE 5.5 I/D x 2.5 WALL	AM50-019	210	
V	HEATSHRINK SLEEVE - YELLOW 12.7 I/D	000640006	3 x 6	
W	HEATSHRINK SLEEVE - BLUE 12.7 I/D	000640005	3 x 6	
X	HEATSHRINK SLEEVE - BLACK 12.7 I/D	000640007	3 x 6	
Y	HEATSHRINK SLEEVE - RED 12.7 I/D	000640004	4 x 6	
Z	BARBED CONNECTOR	000757031	1 OFF	
AA	DOT MARKER - ADHESIVE BACKED YELLOW 4 DIA	000691004	1 OFF	
BB	DOT MARKER - ADHESIVE BACKED BLUE 4 DIA	000691003	1 OFF	
CC	BOTTLE BUNG ASSEMBLY	004/065	3 OFF	
DD	WASHER	004/832	3 OFF	
EE	BOTTLE CAP MODIFICATION	936/306	3 OFF	
FF	HEATSHRINK SLEEVE - GREEN/YELLOW 12.7 I/D	000640009	2 x 6	
GG	SILICONE TUBE 3.2 I/D x 1.0 WALL	AM50-018	30	
HH	SILICONE TUBE 5.5 I/D x 2.5 WALL	AM50-019	580	
JJ	ELBOW CONNECTOR	000757017	1 OFF	

NOTE:-
COLOUR MARKERS FITTED TO TUBING TO BE POSITIONED 20mm FROM TUBE ENDS.

APPROVED S.DOWNES	GEN TOL: X ± 0.5 X.X ± 0.2 X.XX ± 0.1 HOLES ± 0.05 ANGULAR ± 0.5 DEG UNLESS OTHERWISE STATED			DIMENSIONS mm	SCALE: NTS
CHECKED J.HAMILTON	MATERIAL --------	FINISH --------			
DRAWN D.HAPPER	THIS DRAWING IS THE COPYRIGHT OF BENLEY INST. LTD. COPIES IN WHOLE OR PART MUST NOT BE MADE WITHOUT THE WRITTEN CONSENT OF THE COMPANY. © 1996	TITLE PLUMBING DIAGRAM WHITTAKER WASHER			

ISS	DATE	ECN No.	CHK	ISS	DATE	ECN No.	CHK
10	10.1.96	5468	JWH				
9	7.11.94	5095	JWH				
8	16.7.93	2376	JWH				

BENLEY BILLINGSHU SUSSEX,ENG RH14

SHEET	DEPT	DRAWING NUMBER
No. 1 OF 1	22	006/752